FLU25PL Series

Flow switches for liquids

Technical Data Sheet



WATTS®

Description

The **FLU25PL Series** flow switch is an electromechanical two-stage device (open-closed) for measuring flow rate in DN 1” to DN 8” pipes.



FLU25PL

Flow switch for liquids for piping from DN 1” to DN 8”. Plastic case. Brass fitting. 3-contact microswitch: 10 (5) A - 230V. Maximum fluid operating pressure: 10 bar.
Maximum fluid operating temperature: 110°C. Maximum room temperature: 60°C.
Equipped with Minimum and Maximum flow rate adjuster screw.

Compliant with LVD 2014/35/EU.

Type	Part No.	DN	IP rating	Weight (kg)
FLU25PL	401225	1”	IP64	0.86

Technical features	
Contact rating	10 (5) A - 230V - 50/60Hz
Maximum fluid pressure	10 bar
Maximum fluid temperature	110°C
Maximum room temperature	60°C
IP rating	IP64

Design characteristics	
Case and cover	fibreglass-reinforced plastic
Bellows	phosphor bronze
Paddle	stainless steel
Fitting	brass 1”M

Application and operation

FLU25PL Series flow switches are equipped with a metal paddle (7) immersed in the fluid. When the flow rate reaches the threshold level, the paddle operates a switch (2) by means of a lever mechanism. The flow switches are supplied with a set of paddle for use with pipes of different diameters. The metal bellows (3) separates the hydronic components from the electrical components, which is housed in a plastic case (1 and 4) with IP64 protection rating. The switch point can be adjusted (between a minimum and a maximum) by turning the setting screw (8). Flow switches are used as protection devices in all applications where fluid needs to flow round a circuit to ensure that the installed devices work properly and are protected against damage. In heating systems with closed expansion vessels, flow switches are used to shut off the flow of heat to the circuit in the event of pump stoppage (as laid down in point R.3.B of the ISPESL "R" regulations).

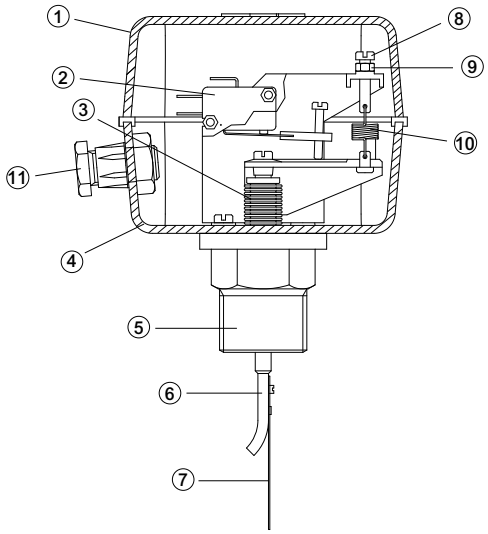

Key

1. Case cover
2. Microswitch
3. Phosphor bronze bellows
4. Case base
5. 1” threaded fitting
6. Control stem
7. Paddle
8. Adjuster screw
9. Locknut
10. Return spring
11. Cable gland

Electrical connections

Make the electrical connections using the terminals and cable gland supplied with the flow switch. Now fix the terminals to the microswitch contacts, selecting either the normally open contact or the normally closed contact depending on system requirements.

NOTE Fit the cable gland O-ring so as to ensure the declared IP rating.

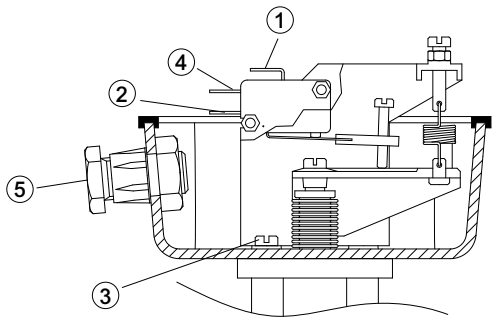

Key

1. Common contact
2. NC contact
3. Earth terminal
4. NO contact
5. Cable gland

Adjusting the switch point

To adjust the switch point, turn the setting screw, bearing in mind that:
- fully tightened = minimum (supplied as standard with this setting);
- fully loosened = maximum.

The table below shows the switch points (both opening and closing) in m³/h according to pipe diameter and the length of the paddles installed. The values shown refer to horizontal installations.

Diameter tube inches	Lenght strip mm	Brought m3/h with least regulation (grapevine all screwed)		Brought m3/h with least regulation (grapevine all unscrewed)	
		close	open	close	open
1”	34	0,9	0,4	2,0	1,5
1” 1/4	34	1,2	0,6	2,6	1,9
1” 1/2	57	1,6	0,9	3,3	2,6
2”	57	3,2	2,3	7,1	5,1
2” 1/2	88	4,2	3,5	8,0	7,0
3”	88	6,3	5,7	12,0	10,5
4”	88	13,5	12,0	28,0	26,0
4”	167	8,0	7,1	20,0	18,0
5”	88	27,0	23,0	60,0	58,0
5”	167	12,1	9,0	30,0	28,0
6”	88	43,0	36,0	91,0	87,0
6”	167	17,2	12,0	35,0	32,0
8”	88	85,0	73,0	176,0	170,0
8”	167	42,0	36,0	90,0	85,0

CAUTION! Switch off the power before adjusting! Use a multimeter to check the trip point of the contacts.

Installation

Select the appropriate paddle to fit on the flow switch according to the diameter of the pipe concerned. The flow switch is supplied with paddles of 4 different lengths (34, 57, 88 and 167 mm) as shown in the settings table.

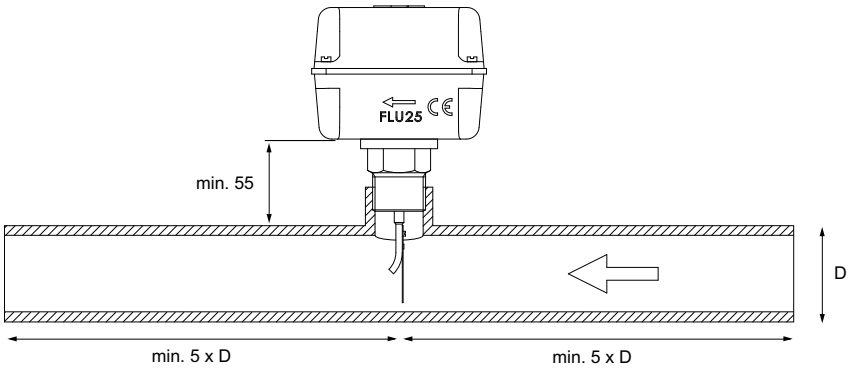

To ensure correct operation, you are advised to:

- comply with the direction of flow shown by the arrow marked on the case;
- fit the flow switch on horizontal pipes (with vertical paddle);
- leave a certain distance from sources of turbulence (bends, valves, etc.); the recommended minimum distance is 5 times the diameter of the pipe;
- leave a minimum distance of 55 mm between the pipe and the lower base of the device;
- in heating systems, it is preferable to fit the device on the return pipe.

Overall dimensions (mm)

FLU25PL

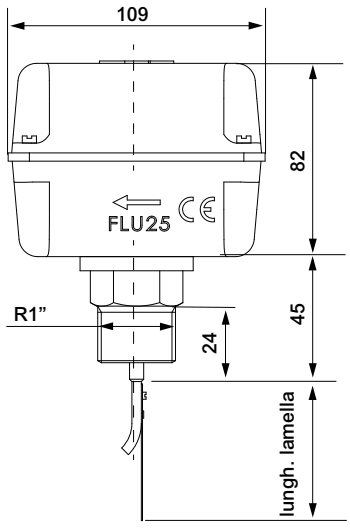

Specification text

FLU25PL Series - Flow switch for liquids **FLU25PL Series** - WATTS brand - for DN 1” to DN 8” pipes. Plastic body. Brass fitting. 3-contact microswitch: 10(5)A - 230V. Maximum fluid operating pressure: 10 bar. Max. fluid operating temperature: 110°C. Maximum room temperature: 60°C. Equipped with min. and max. flow rate adjuster screw. Compliant with LVD 2014/35/EU.

The descriptions and photographs contained in this product specification sheet are supplied by way of information only and are not binding.
Watts Industries reserves the right to carry out any technical and design improvements to its products without prior notice. Warranty: All sales and contracts for sale are expressly conditioned on the buyer’s assent to Watts terms and conditions found on its website at . Watts hereby objects to any term, different from or additional to Watts terms, contained in any buyer communication in any form, unless agreed to in a writing signed by an officer of Watts.

Watts Industries Italia S.r.l.
Via Brenno, 21 • 20853 Biassono (MB) • Italia
Tel.
•

© 2025 Watts