GENERAL CATALOG

KNIPEX®

# Pliers

MADE IN GERMANY SINCE 1882

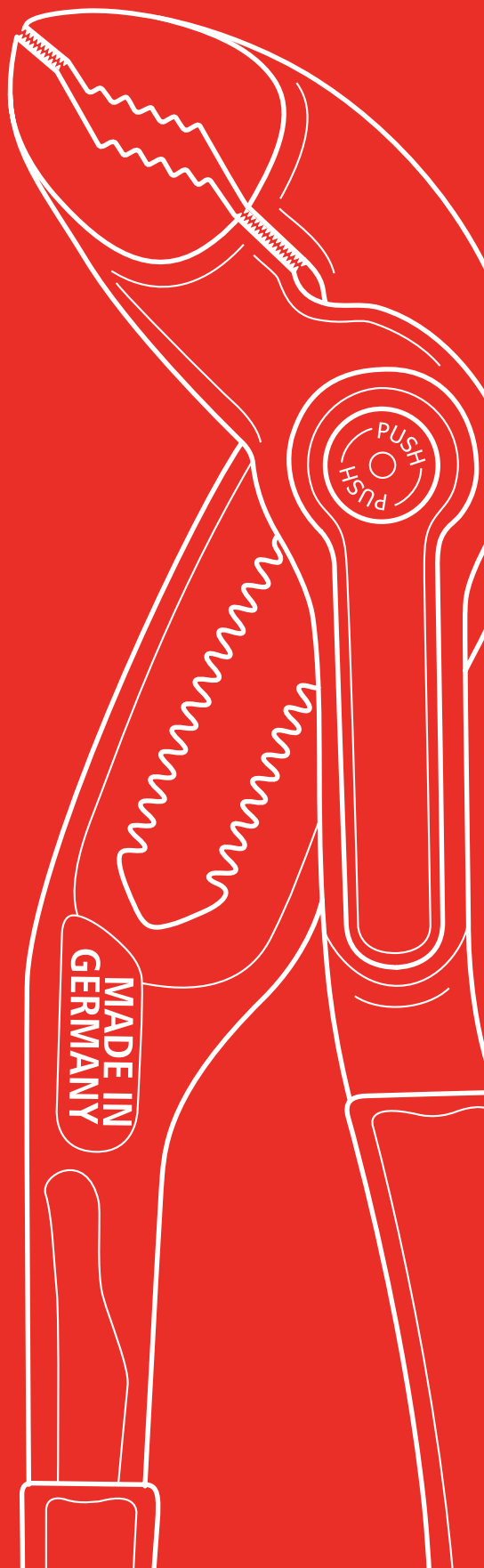

# The pliers company

**KNIPEX Quality – Made in Germany**




KNIPEX
für den Mann vom Fach
1965


KNIPEX
KNIPEX
Zangen


KNIPEX
KNIPEX 01-160
VANADIN-SUPER
1974

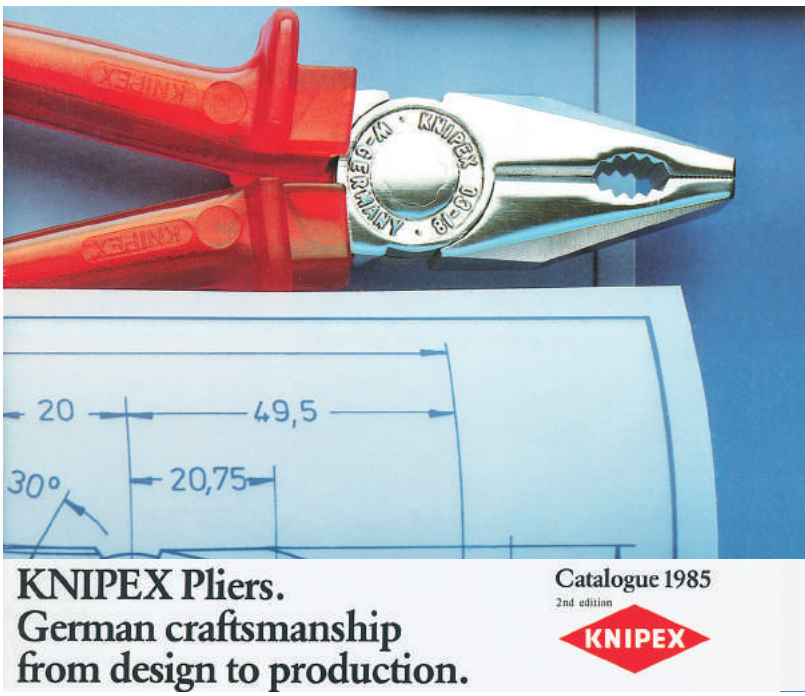
20
49,5
30°
20,75
KNIPEX Pliers.
German craftsmanship
from design to production.
Catalogue 1985
2nd edition
KNIPEX


KNIPEX
KNIPEX
Tarif des pinces et Tenailles
Septembre 1952


KATALOG 1939
C·GUST·PUTSCH
ZANGENFABRIK
WUPPERTAL-CRONENBERG

# KNIPEX –
# the company behind the pliers.

For over 130 years and four generations, we have been working passionately on being the best manufacturer of pliers for our customers and users – with a clear focus, high demands and a constant flow of new ideas. Throughout the world, our brand enjoys a great deal of trust, and we aim to consistently meet and rebuild this.

Success is important to us, but is not something we look for at any price. We are guided by values, orientate our actions towards sustainability, and face up to our responsibility towards society and the natural environment in which and with which we live. We invest heavily in the efficiency of our location and the qualification of our employees, working today on the success of tomorrow and the day after that – so that we can also continue to be a strong and reliable partner in the future.

Yours, Ralf Putsch



**Ralf Putsch, Managing Partner.**


1
KNIPEX
MADE IN
CoBolt® XL


2
KNIPEX Cobra
Cobra®


3
Crimp
12-20
14
12
Electrical Installation Pliers


4
KNIPEX
X-Cut®

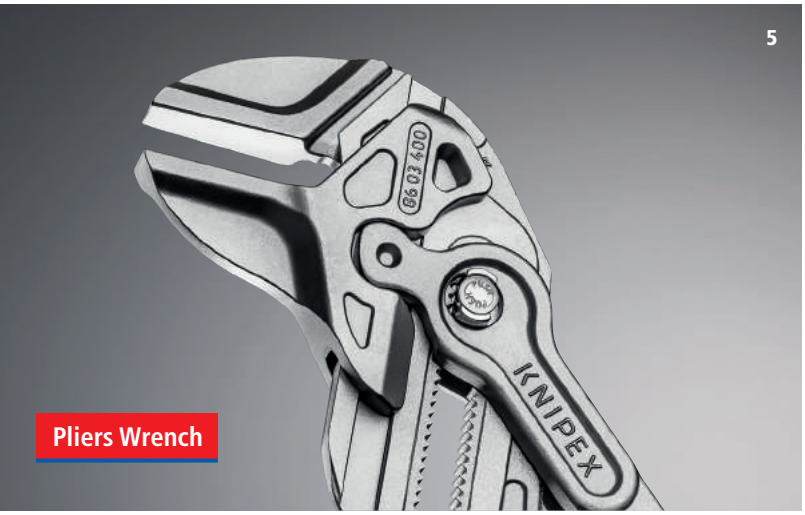
5
KNIPEX
Pliers Wrench


6
KNIPEX
TwinForce®


7
KNIPEX
Bolt End Cutting Nippers


8
KNIPEX
Spring Hose Clamp Pliers

# KNIPEX pliers are different: ideas for improved use and performance.

Ever better pliers – that is our guiding principle to which we devote all of our expertise and creativity. We are not satisfied with standard solutions, but rather continuously develop new and improved models that are better to work with and easier to use.

Working this way means that sometimes we find unconventional solutions to situations, which then go on to set new benchmarks in the industry: novel methods of power transmission, easier and faster handling, combining various functions in a single tool and imaginative problem solvers for special applications. These new benchmarks save our users energy and time, giving them better work results with less effort.

In addition to major innovations, we work continuously on reworking our current product models to improve their function, ergonomics and service life.

**1 Compact force:** CoBolt® XL – two-hand operation for maximum cutting force.

**2 Easy operation:** Cobra® – fast grip, precise adjustment, push-button, self-locking.

**3 Multifunctional:** Electrical Installation Pliers – six functions in one pair of pliers.

**4 Universal cutting force:** X-Cut® – the first high leverage diagonal cutter with box joint and precision cutting edges.

**5 Speed and versatility:** Pliers Wrench – turns, holds, bends and presses without damaging materials.

**6 High performance cutting edges:** TwinForce® – high strength due to unique transmission.

**7 Redefined end cutting nippers:** Bolt End Cutting Nippers – light, slim, cut directly on the pivot point.

**8 Problem-solver:** Spring Hose Clamp Pliers – the only pliers for all spring clamps; apply safely from all angles.

# Step by step:
# from idea to product.

A large number of steps lie between an initial idea and the finished product. We never lose sight of the fact that every new or redevelopment must represent a noticeable improvement for the user. We deploy the most up to date technologies and processes when putting our ideas into practice.

We begin by carefully establishing the requirements and selecting the best concepts. The tool is constructed on a computer and the function is simulated with the help of special software. This is followed by the first models made on a 3D printer and by milling and extensive tests on steel prototypes – working closely with experienced users. The first products manufactured using production processes are subjected to additional extensive tests – under conditions far more stringent than normal load.




**The locking mechanism on the Spring Hose Clamp Pliers permits simple and safe work, even with closed clamps. Modern CAD technology simulates the mechanism on the screen.**



Filip Marovic, project manager for KNIPEX Product Development – "It can be seen repeatedly during the development cycles how important even the smallest detail can be. This is the very thing that motivates me to find creative new solutions. During the process we also take new technical possibilities in processing technology and materials into consideration."

# Core qualities:
# steel – and what we make from it.

You can expect a great deal more from a pair of KNIPEX pliers. This starts with the material. The many models of pliers in our range are designed for different requirements and loads. We use steel alloys that have been specially selected for the application and rolled according to our high specifications. Long lasting cutting capability when working with very hard wires, strength when working with high torque loads, and good resistance to corrosion are examples of these targets.

The respective materials are then given their specific molecular structure in a number of coordinated heat treatment steps to produce the optimal relationship between hardness and toughness. These processes allow us to achieve the high degree of reliability, durability, and service life that are the very definition of KNIPEX pliers.

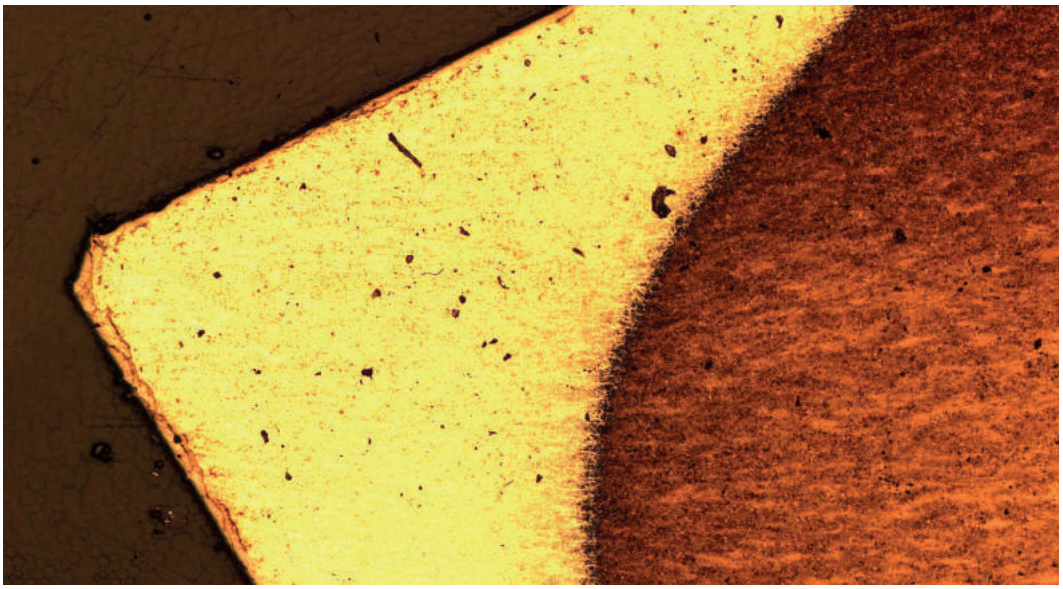

**Macro image of a cutter after induction hardening. The specially hardened cutting area (light) is in sharp contrast to the softer structure of the body of the pliers (dark).**


KNIPEX




KNIPEX



Alligator® Water Pump Pliers being forged by a hydraulic driven drop-forging hammer.

# This is how our pliers are given their shape: hot and under high pressure.

Forging as a forming process is an old cultural technique and continues to hold fascination today. With an impact of up to five and a half tons, the yellow glowing piece of steel is pounded in the upper and lower die at a temperature of 2,282°F. This gives it its basic shape and simultaneously a well-compacted structure.

The production of the forging die in our tool making requires a great deal of experience and high precision, as this raw component will be crucial to the subsequent quality of the pliers. The contours of the forged component are milled at processing centers in the hardened and high strength die block.



**Forging die for the high leverage diagonal cutters with forged-in axle.**

# The technology behind the pliers: machines made by KNIPEX.

Tools can only be as good as the production technology used to manufacture them. In other words, there cannot be superior products without advances in production processes.

Due to our specialization, we can focus on the technologies needed to produce high quality pliers efficiently. We have more than 400 machines built with the specialized knowledge of generations. We build many of the machines ourselves or adapt machines precisely to our high standards using components we have manufactured. We even program the software for the control and operation of the machinery ourselves.

From the product idea to the dispatch of the finished pliers to our customers: everything is done under one roof. This way we can directly influence all steps of value creation ourselves in terms of quality and efficiency, and make continuous improvements. Short distances and direct contact simplify the coordination of processes and communication between employees.

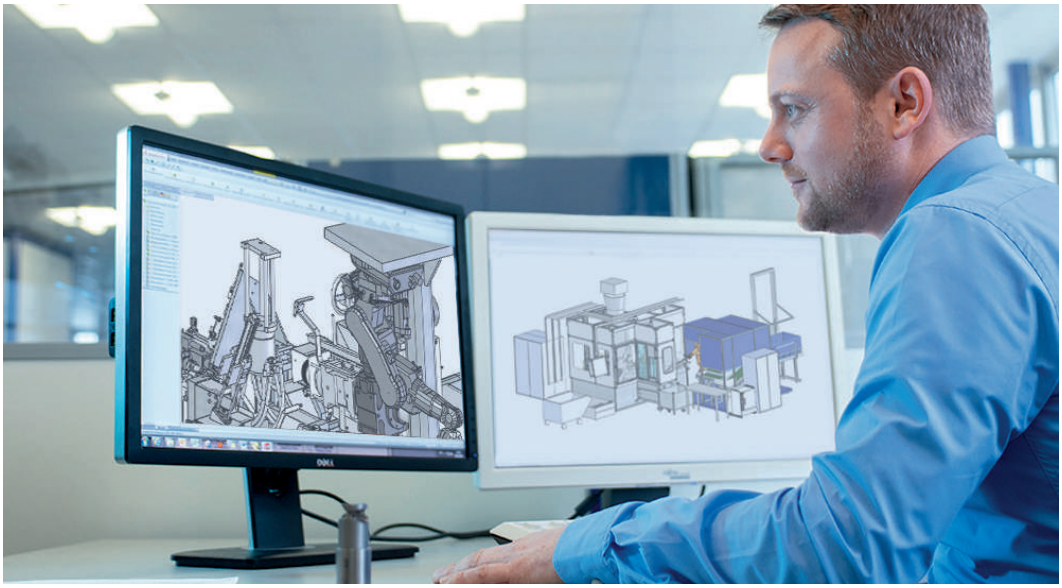

**We ensure our high standards by developing our own processes and machinery.**



**Efficiently coordinated processes and machinery.**

**Over 45,000 pairs of different models of pliers leave our factory every day.**

Only after several test cuts, does a pair of KNIPEX cutting pliers leave our factory.

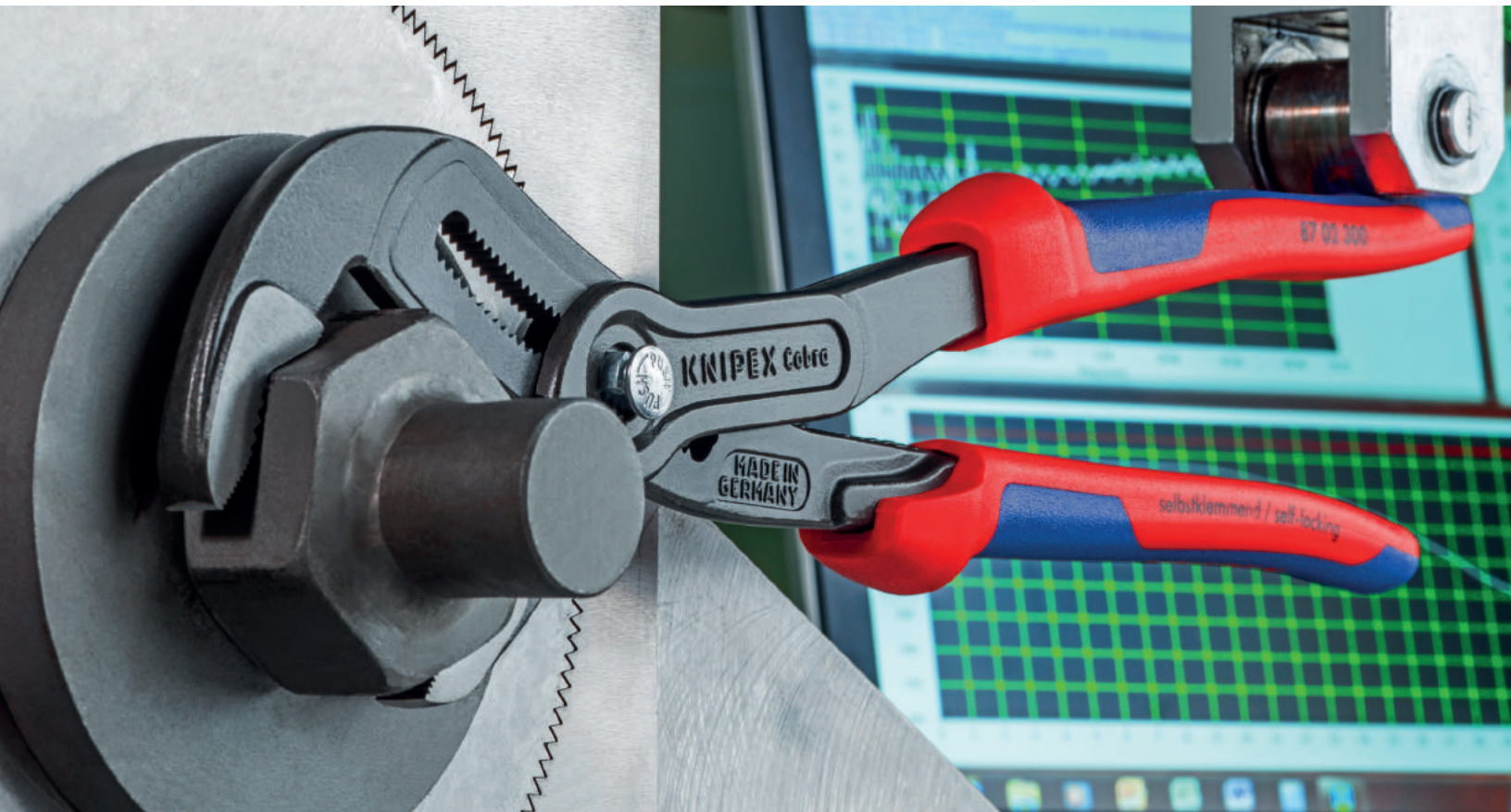

# We take it very literally: 100% reliability.

The precision of pliers is essential for their function: without accuracy there can be no reliable cutting, gripping, bending and zero backlash.  The tight tolerances, which we make sure are complied with through the use of modern production technology, enable us to meet our stringent quality specifications.

We ensure compliance through strict measurements and diverse inspections – after the various production steps and at the end of the entire process. To do this we use the most up-to-date measurement technology and endurance tests – as well as the practical component test by hand.



**Shape and roughness of the diagonal cutter's cutting edge are precisely measured with an optical 3D measuring system.**

# More than excellent pliers: what else you can expect from us.

Quality does not stop with the product. Trust, reliability and a collaborative approach define our business relationships – with consistent customer focus, good service and competent field staff. We provide advice and training, and supply you with extensive digital product data adapted to your specific requirements. Added to this are diverse possibilities for sales support.

You will not find the breadth and depth of our range with any other manufacturer worldwide – that's how we ensure that your customers can always find the tool they are looking for.




**We present the breadth and depth of our range at in-house exhibitions and open house days.**


KNIPEX
KNIPEX
KNIPEX
1000 V
EN 60 900
TwinForce
X-Cut


KNIPEX

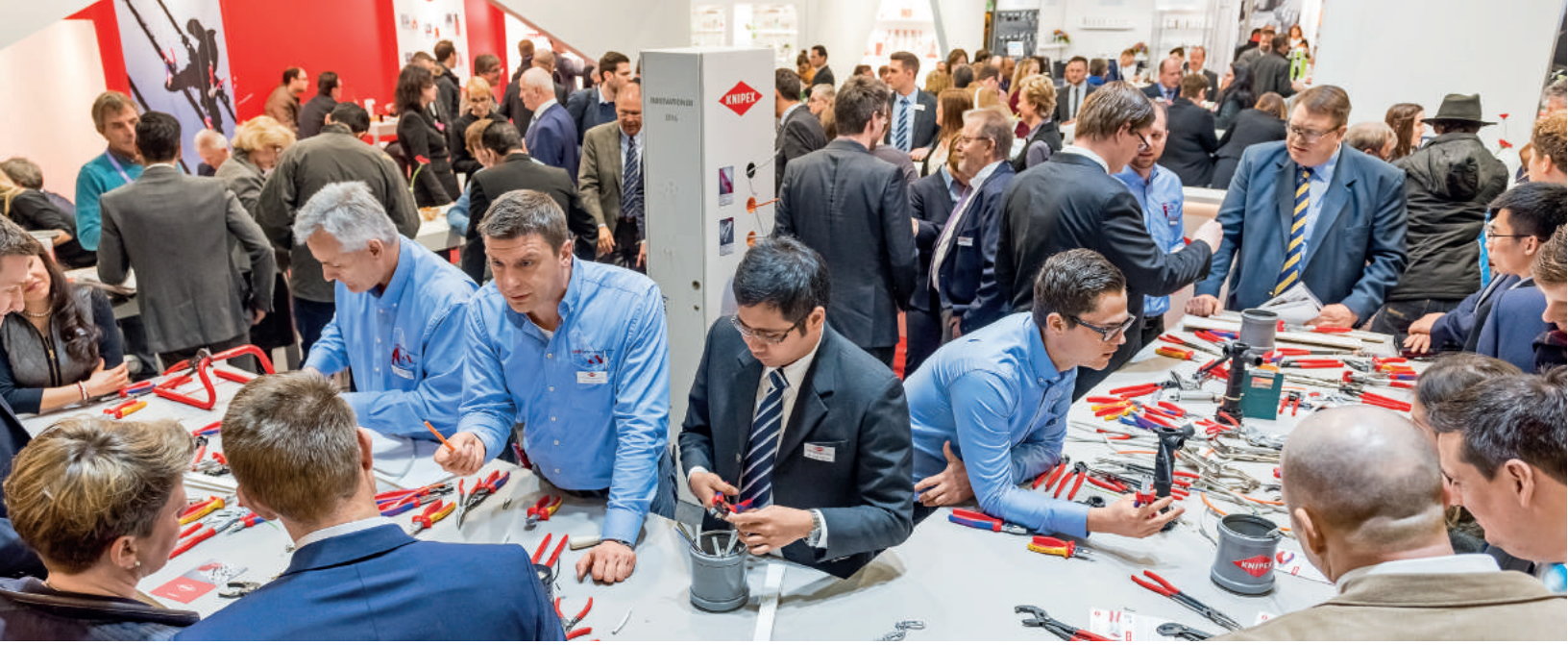







# At home in the world: locations in more than 100 countries for you.

KNIPEX is the global pliers brand. We are present in all continents, with a dense network of customers, representatives, and branches. In order to be closer to our retailers and be able to give them even better support, we are further extending our international activities all the time.

There is no substitute for direct contact, which is why we are there for you personally at more than 100 trade shows each year. With the help of the most varied media – classic and digital – we provide comprehensive information about our range and application opportunities in over 30 languages. We reach users and fans throughout the world via social media and hundreds of KNIPEX online videos.




**We make up-to-date information available digitally in several languages.**

# The key factor: our employees.

The most important basis of our success is our employees. Their knowledge and skills, their dedication and their ideas are crucial to our efficiency and thus to our future.

As a company, we are a social community. We want to shape our culture in such a way that allows our employees to participate and create identity through their work but also as individuals. We create good conditions for our employees to develop their potential, to obtain further qualifications and to stay healthy. It is also important to us that our employees are able to successfully balance family and career.

We invest a significant amount of both expense and care in the training of young people, but also impart a wide spectrum of professional and personal skills to other employees.



**Our junior staff obtain their qualifications in our own modern training workshop.**








2592
2606
2605
2569
2601
2575
2590
2593
2607
2603
2561




KNIPEX


KNIPEX
KNIPEX Quality – Made in Germany
Null Emissionen – 100% elektrisch
W KW 45

# Acting responsibly – sustainable management.

As a company, we believe we share responsibility for our natural environment and the well-being of society. We interact with both in various ways. We consume resources, but take care to use them as carefully as possible, and want to make a contribution to ensuring that they are available to future generations in the same – or wherever possible – a better form.

Our ecological objectives include a continuous reduction in our energy consumption, reduction in the volumes of waste and caring for the biodiversity at our site. In addition, we participate in major climate protection projects.

Companies should also be good citizens. We support numerous institutions and organizations in the areas of education and culture. We maintain a close exchange with schools and universities, and strengthen civic engagement in our region in diverse ways.



**We support the Bergische music school in the "Singpause" project which, with the help of specially trained teachers, communicates the foundations of music and pleasure by singing together in schools.**

**27-31** **Combination and Lineman's Pliers**
Combination Pliers | Needle –Nose Combo Pliers | Lineman's Pliers



**32** **Ear Clamp Pliers**
Single Jaw | Dual Jaw Ear Clamp Pliers



**33-50** **Wire Strippers and Dismantling Tools**
Installation Strippers | Self-Adjusting / MultiStrip 10 | Automatic |
Electrician's Installation Pliers | Dismantling Tools | ErgoStrip®




**51-61** **Long Nose Pliers**
Round Nose Pliers | Flat Nose Pliers | Snip Nose Pliers | Long Reach Needle Nose Pliers



**62-67** **Electronics Gripping Pliers**
Precision Electronics Gripping Pliers | Mounting Pliers



**68-72** **Gripping and Mechanics Pliers**
Universal Grip Pliers | Welding Grip Pliers



**73-81** **Circlip Pliers**
Circlip Pliers | Precision Circlip Pliers



**82-87** **Pincers and Nippers**
Carpenters' Pincers | Concreters' Nippers | End Cutting Nippers



**88-92** **Bolt Cutters**
CoBolt® Compact Bolt Cutters | CoBolt XL | Bolt Cutters | Concrete Mesh Cutter



**93-102** **Diagonal Pliers**
Flush Cutters | X-Cut® | TwinForce® | High Leverage Diagonal Cutters | Center Cutter



**103-121** **Electronics Diagonal Cutters**
End Cutting Nippers | Diagonal Cutters | Carbide Tip Diagonal Cutters |
Super Knips® | Super Knips XL



**122-141** **Pipe Wrenches and Water Pump Pliers**
Pipe Wrenches | Hose Clamp Pliers | Pliers Wrenches | Cobra® | Alligator®



**142-148** **Specialty Pliers**
End Cutting Nippers | Diagonal Cutters | Carbide Tip Diagonal Cutters | Super Knips® | Super Knips XL



**149-154** **Tweezers**
Precision | Insulated | Plastic | Crossover

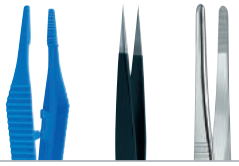

**155-158** **Pipe Cutters and Special Shears**
Mitre Shears | Anvil Shears | Kevlar® Fibers Shears | Electricians' Shears



**158-169** **Cable Cutters and Wire Rope Cutters**
Twin Cutting Edge | Ratcheting | ACSR | Wire Rope Shears and Cutters



**170-191** **Crimping Pliers**
MultiCrimp® | PreciForce® | Four-Mandrel | Twistor 16



**192-195** **Control Cabinet Keys and LED Light**
TinwKey® | Profi-Key | Universal Key



**196-205** **Tool Sets and Carriers**
Tool Rolls with Tools | Top Selling Tool Sets | Electronics Pliers Sets



**206-211** **Tether Tool System**

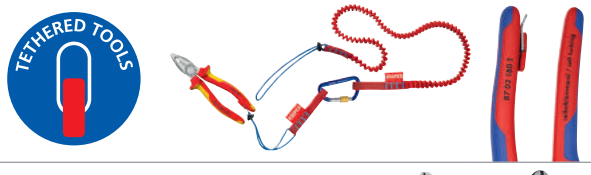


**212-249** **Insulated Tools and Sets**




**250-264** **Index / Article Number | Index | Pliers-ABC | Symbols**


KNIPEX

# High Leverage Combination Pliers
DIN ISO 5746

02

35% less effort required than with conventional combination pliers
Cutting edge hardness (approx. 63 HRC) for heavy-duty cutting

- > easier work due to high leverage design
- > easier cutting, powerful gripping, bending and pulling
- > long cutting edges for thicker cables
- > gripping zones for flat and round material for a variety of uses
- > high-grade special tool steel; forged, multi stage oil-hardened

**02 02 225 T BKA***
Pliers with integrated tether attachment point for tool drop protection system











**02 01 180**



**02 02 180**



**02 02 225 T BKA**



**02 08 200 US**
1000 V ASTM

| Product Number | Packaging | ↔ Inch mm | | Pliers | Head | Handles | Cutting capacities Ø Inch Ø mm | Ø Inch Ø mm | Ø Inch Ø mm | mm² | lbs |
|---|---|---|---|---|---|---|---|---|---|---|---|
| **02 01 180** | | 7 1/4 180 | | black atramentized | polished | plastic coated | 3/32 2.5 | 5/64 2.0 | 29/64 11.5 | 16.0 | 0.45 |
| **02 01 200** | X | 8 200 | | | | | 7/64 2.8 | 3/32 2.2 | 1/2 13.0 | 25.0 | 0.66 |
| **02 01 225** | X | 9 225 | | | | | 1/8 3.0 | 3/32 2.5 | 35/64 14.0 | 25.0 | 0.79 |
| **02 02 180** | X | 7 1/4 180 | | black atramentized | polished | multi-component grips | 3/32 2.5 | 5/64 2.0 | 29/64 11.5 | 16.0 | 0.53 |
| **02 02 200** | X | 8 200 | | | | | 7/64 2.8 | 3/32 2.2 | 1/2 13.0 | 25.0 | 0.75 |
| **02 02 225** | X | 9 225 | | | | | 1/8 3.0 | 3/32 2.5 | 35/64 14.0 | 25.0 | 0.90 |
| **02 02 225 T BKA** | X | 9 225 | | black atramentized | polished | multi-component grips, integrated tether attachment point | 1/8 3.0 | 3/32 2.5 | 35/64 14.0 | 25.0 | 0.95 |
| **02 08 200 US** | X | 8 200 | 1000 V ASTM | black atramentized | polished | insulated, multi-component grips, ASTM-tested | 7/64 2.8 | 3/32 2.2 | 1/2 13.0 | 25.0 | 0.82 |
| **02 08 225 US** | X | 9 225 | | | | | 1/8 3.0 | 3/32 2.5 | 35/64 14.0 | 25.0 | 0.95 |

*Learn more about our tethered tool system on pages 207-211

# Combination Pliers
DIN ISO 5746

03

> gripping zones for flat and round material for a variety of uses
> cutting edges for soft and hard wire
> long cutting edges for thicker cables
> cutting edge hardness (approx. 60 HRC)
> special tool steel; forged, multi stage oil-hardened











**03 01 180**



**03 02 180**



**03 08 200 SBA**
1000 V ASTM

| Product Number | Packaging | ↔ Inch mm | | Pliers | Head | Handles | Cutting capacities Ø Inch Ø mm | Ø Inch Ø mm | Ø Inch Ø mm | mm² | lbs |
|---|---|---|---|---|---|---|---|---|---|---|---|
| **03 01 140** | | 5 1/2 140 | | black atramentized | polished | plastic coated | 7/64 2.8 | 5/64 1.8 | 23/64 9.0 | 10.0 | 0.25 |
| **03 01 160** | | 6 1/4 160 | | | | | 1/8 3.1 | 5/64 2.0 | 25/64 10.0 | 16.0 | 0.41 |
| **03 01 180** | | 7 1/4 180 | | | | | 9/64 3.4 | 3/32 2.2 | 15/32 12.0 | 16.0 | 0.48 |
| **03 01 200** | X | 8 200 | | | | | 5/32 3.8 | 3/32 2.5 | 1/2 13.0 | 16.0 | 0.61 |
| **03 01 250** | | 10 250 | | | | | 5/32 3.8 | 3/32 2.5 | 19/32 15.0 | 25.0 | 1.04 |
| **03 02 160** | | 6 1/4 160 | | black atramentized | polished | multi-component grips | 1/8 3.1 | 5/64 2.0 | 25/64 10.0 | 16.0 | 0.49 |
| **03 02 180** | | 7 1/4 180 | | | | | 9/64 3.4 | 3/32 2.2 | 15/32 12.0 | 16.0 | 0.56 |
| **03 02 200** | | 8 200 | | | | | 5/32 3.8 | 3/32 2.5 | 1/2 13.0 | 16.0 | 0.71 |
| **03 08 160 SBA** | X | 6 1/4 160 | 1000 V ASTM | black atramentized | polished | insulated, multi-component grips, ASTM-tested | 1/8 3.1 | 5/64 2.0 | 25/64 10.0 | 16.0 | 0.55 |
| **03 08 200 SBA** | X | 8 200 | | | | | 5/32 3.8 | 3/32 2.5 | 1/2 13.0 | 16.0 | 0.76 |

# Needle-Nose Combination Pliers
DIN ISO 5746

08

**Small high leverage combination pliers with pointed jaws**
**For all common installation and repair work**

Handy for use when working in confined areas due to slim head design and pointed jaws (anti-twist)

Gripping surfaces with special convex contour on one side for secure gripping of flat parts

Milled groove in the gripping area permits small parts such as nails, pins and bolts to be held and pulled

> easy cutting due to the high leverage joint
> cutting edges for soft, medium hard and hard wire
> long service life and stable tips
> high-grade special tool steel; forged, multi stage oil-hardened

**08 22 145 T BKA***
Pliers with integrated tether attachment point for tool drop protection system



Milled groove in the gripping area

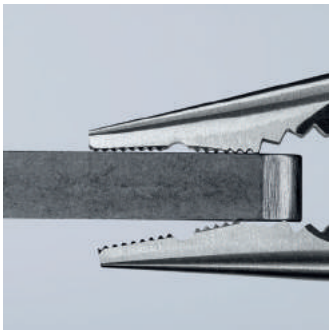
Firm grip on flat material due to three-point contact



Easy cutting thanks to the high leverage joint


Anti-twist tips remain stable even under high strain



**08 21 145**



**08 22 145**



**08 22 145 T BKA**



**08 28 145 US**
**1000 V ASTM**

| Product Number | Packaging | ↔ Inch mm | | Pliers | Head | Handles | Cutting capacities Ø Inch Ø mm | Ø Inch Ø mm | Ø Inch Ø mm | mm² | lbs |
|---|---|---|---|---|---|---|---|---|---|---|---|
| **08 21 145** | X | 5 3/4 145 | | black atramentized | polished | plastic coated | 1/8 3.0 | 5/64 2.0 | 5/16 8.0 | 16.0 | 0.26 |
| **08 22 145** | X | 5 3/4 145 | | black atramentized | polished | multi-component grips | 1/8 3.0 | 5/64 2.0 | 5/16 8.0 | 16.0 | 0.32 |
| **08 22 145 T BKA** | X | 5 3/4 145 | | black atramentized | polished | multi-component grips, integrated tether attachment point | 1/8 3.0 | 5/64 2.0 | 5/16 8.0 | 16.0 | 0.39 |
| **08 28 145 US** | X | 5 3/4 145 | 1000 V ASTM | black atramentized | polished | insulated, multi-component grips, ASTM-tested | 1/8 3.0 | 5/64 2.0 | 5/16 8.0 | 16.0 | 0.39 |

*Learn more about our tethered tool system on pages 207-211

# Lineman's Pliers

DIN ISO 5746 ASME B107.20

09

High transmission ratio for easy cutting.

High leverage design requires 50% less effort compared to conventional combination pliers due to an optimized transmission ratio.

- heavy-duty
- ergonomically optimized handle shape for firm contact to the hand and fatigue reducing operation
- effective cross-hatched knurled gripping zone in the jaws – for strong gripping and pulling
- serrated gripping zone below the joint for powerful leverage
- cutting edges for soft and hard wire, nails, ACSR and piano wire
- cutting edge hardness (approx. 64 HRC)
- vanadium steel, forged, multi stage oil-hardened

**09 11 240 / 09 12 240 / 09 12 240 T BKA***
With fish tape puller in the joint gap; with universal crimping point below the joint

**09 02 240 T BKA / 09 12 240 T BKA***
Pliers with integrated tether attachment point for tool drop protection system

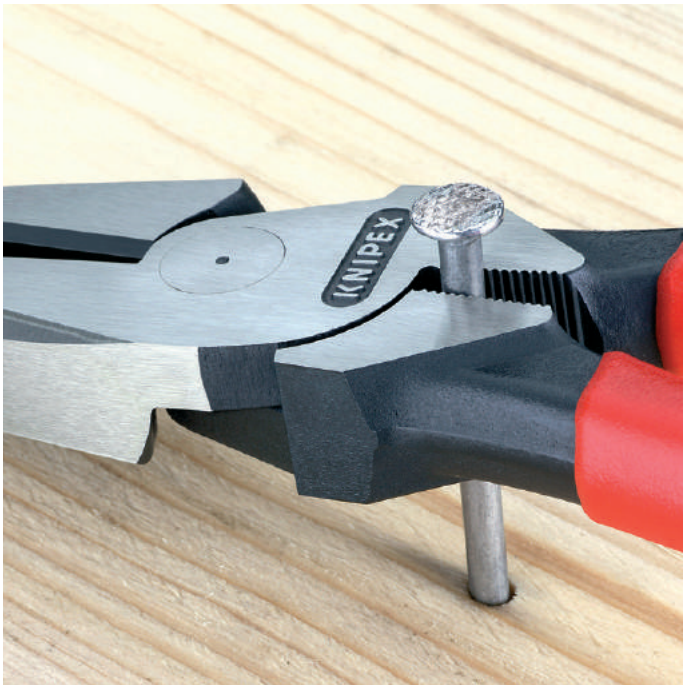

Gripping zone below the joint for powerful leverage




**09 01 240**




**09 02 240**




**09 02 240 T BKA**




**09 08 240 US**
1000 V ASTM




**09 11 240**




**09 12 240 T BKA**



*Learn more about our tethered tool system on pages 207-211



09 11/12 240:
Universal crimping area below the joint



09 11/12 240:
Fish tape puller in the joint gap

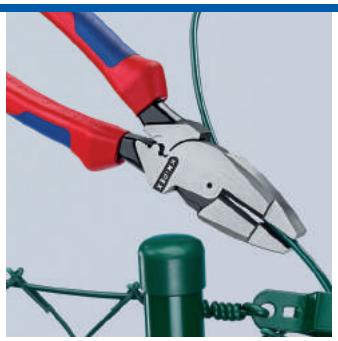

Cross-hatched, knurled gripping zone for firm gripping and pulling, e. g. for fence construction



Long cutting edges for cutting flat cables

| Product Number | Packaging | ↔ Inch mm | | Pliers | Head | Handles | Cutting capacities ◑ Ø Inch Ø mm | Cutting capacities ◕ Ø Inch Ø mm | ⚖ lbs |
|---|---|---|---|---|---|---|---|---|---|
| **09 01 240** | X | 9 1/2 240 | | black atramentized | polished | plastic coated | 3/16 4.6 | 1/8 3.0 | 0.96 |
| **09 02 240** | X | 9 1/2 240 | | black atramentized | polished | multi-component grips | 3/16 4.6 | 1/8 3.0 | 1.01 |
| **09 02 240 T BKA** | X | 9 1/2 240 | | black atramentized | polished | multi-component grips, integrated tether attachment point | 3/16 4.6 | 1/8 3.0 | 1.08 |
| **09 08 240 US** | X | 9 1/2 240 | 1000 V ASTM | black atramentized | polished | insulated, multi-component handles, ASTM-tested | 3/16 4.6 | 1/8 3.0 | 1.02 |
| **09 11 240** | X | 9 1/2 240 | | black atramentized | polished | plastic coated | 3/16 4.6 | 1/8 3.0 | 0.91 |
| **09 12 240** | X | 9 1/2 240 | | black atramentized | polished | multi-component grips | 3/16 4.6 | 1/8 3.0 | 1.04 |
| **09 12 240 T BKA** | X | 9 1/2 240 | | black atramentized | polished | multi-component grips, integrated tether attachment point | 3/16 4.6 | 1/8 3.0 | 1.07 |



# Ear Clamp Pliers 10

## Suitable for universal use, for 1-ear and 2-ear clamps

> for the simple and reliable mounting of 1-ear and 2-ear clamps (Oetiker® system or similar)
> no damage to press points on the ear clamps
> the slim head permits good accessibility in confined areas
> versatile use for clamps on CV boots, cooler and fuel lines, air pressure systems, compressors
> durable and strong
> high-grade special tool steel; forged, oil-hardened

**10 99 I220**
Suitable for universal use due to the additional side jaw



**10 98 I220**



**10 99 I220**





**10 98 I220**



Front press jaw



Sealing the fluid hose on the connecting piece



Sealing the pneumatic hose on the quick action coupling



Sealing the hose connection on central lubrication

**10 99 I220**



Using the front press jaw



Sealing the pneumatic hose on the quick action coupling using the side press jaw



Using the side press jaw



Sealing the fluid hose on the connecting piece using the side press jaw

| Product Number | Packaging | ↔ Inch mm | Pliers | Head | Handles | ⚖ lbs |
|---|---|---|---|---|---|---|
| **10 98 I220** | | 8 3/4 220 | black atramentized | polished | plastic coated | 0.78 |
| **10 99 I220** | | 8 3/4 220 | black atramentized | polished | plastic coated | 0.75 |

# Insulation Strippers



- for single, multi and fine-stranded conductors with plastic or rubber insulation max.13/64" (5.0 mm) dia., suitable up to 8 AWG wire
- easy adjustment to the required diameter of solid or stranded wire with knurled screw and lock nut
- special tool steel; forged, oil-hardened

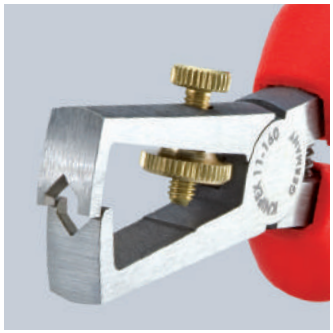

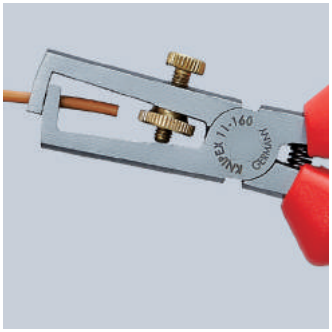



**11 01 160**



**11 02 160**



**11 08 160 SBA**

1000 V ASTM

**WARNING:** This product can expose you to chemicals including lead, which is known to the State of California to cause cancer. For more information go to

### Prismatic blade

The red area is cut over four surfaces. Works with highly-elastic materials also.

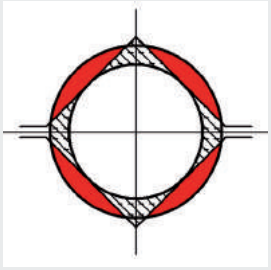

| Product Number | Packaging | ↔ Inch mm | | Pliers | Head | Handles | Stripping capacities Ø Inch Ø mm | Stripping capacities mm² | AWG | lbs |
|---|---|---|---|---|---|---|---|---|---|---|
| **11 01 160** | | 6 1/4 160 | | black atramentized | polished | non-slip plastic coated | 13/64 5.0 | 10.0 | up to 8 | 0.32 |
| **11 02 160** | | 6 1/4 160 | | black atramentized | polished | multi-component grips | 13/64 5.0 | 10.0 | up to 8 | 0.38 |
| **11 08 160 SBA** | X | 6 1/4 160 | 1000 V ASTM | black atramentized | polished | insulated, multi-component grips, ASTM tested | 13/64 5.0 | 10.0 | up to 8 | 0.40 |

## Electronics Wire Stripping Shears

11 8





- for cutting and stripping solid, multi and fine-stranded conductors with a diameter up to 3/64" (18-32 AWG)
- pointed head of shears above the wire stripping hole for the accurate cutting of fine wire in confined places
- easy adjustment to the required diameter of solid or stranded wire with knurled screw and lock nut
- opening spring for easy repetitive work
- special tool steel; oil-hardened




**11 82 130**

**WARNING:** This product can expose you to chemicals including lead, which is known to the State of California to cause cancer. For more information go to

| Product Number | Packaging | ↔ Inch mm | | Head | Handles | Stripping capacities Ø Inch Ø mm | Stripping capacities AWG mm² | lbs |
|---|---|---|---|---|---|---|---|---|
| **11 82 130** | | 5 1/4 130 | | polished | multi-component grips | up to 3/64 0.03-1.19 | 32-18 0.01-0.75 | 0.20 |

## Electronics Wire Stripper

11 9

- for single, multi and fine stranded cables having a diameter up to 1/32" (0.1 up to 0.8 mm), with plastic or rubber insulation
- easy adjustment to the required diameter of solid or stranded wire with knurled screw and lock nut
- opening spring for easy repetitive work
- the mirror polish and fine film of oil offer effective rust protection – no circuit faults caused by peeling chrome from plated tools
- special tool steel, forged, oil-hardened




**11 92 140**

**WARNING:** This product can expose you to chemicals including lead, which is known to the State of California to cause cancer. For more information go to

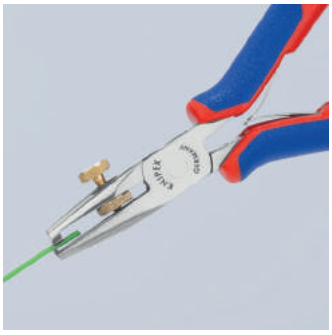



| Product Number | Packaging | ↔ Inch mm | | Head | Handles | Stripping capacities AWG mm² | lbs |
|---|---|---|---|---|---|---|---|
| **11 92 140** | | 5 1/2 140 | | mirror polished | multi-component grips | 38 - 20 0.1 - 0.8 | 0.22 |

# Insulation Stripper
with replaceable blades

12

- leaves wire undamaged due to precision-ground blade shapes, even multi-stranded conductors are stripped gently
- during stripping, the wire is held firmly by clamping jaws
- with adjustable length stop for consistent stripping length during repetitive work
- a spring leads the stripper back to the starting position
- pliers body: aluminum
- blade: special tool steel; oil-hardened

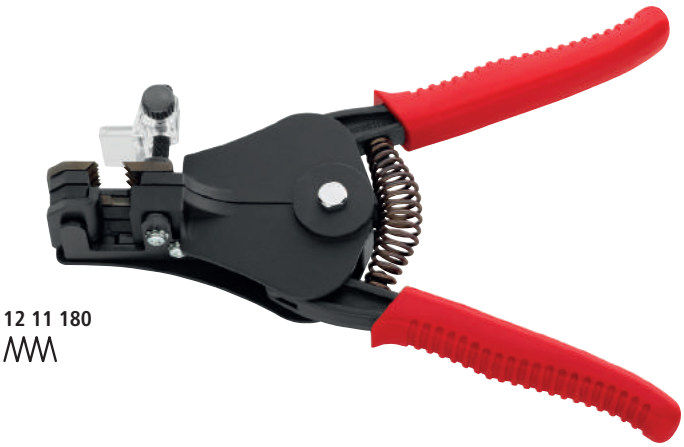

**12 11 180**



**12 21 180**

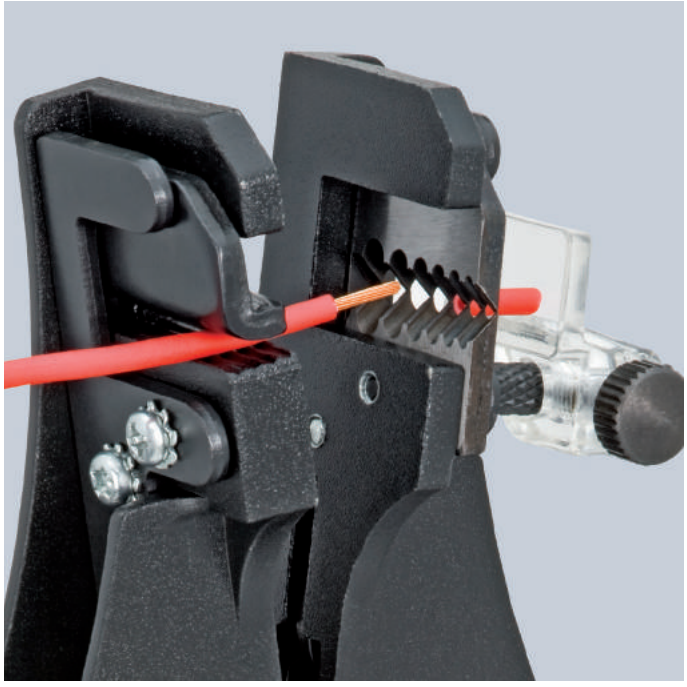

Adjustable length stop for repetitive work




12 11 180: wire cross-sections in inches




12 21 180: wire cross-sections in mm²

| Product Number | Packaging | ↔ Inch mm | | Pliers | Handles | Stripping capacities mm | Stripping capacities mm² | ⚖ lbs |
|---|---|---|---|---|---|---|---|---|
| **12 11 180** | | 7 1/4 180 | | black lacquered | with plastic grips | 0.5 / 1.2 / 1.6 / 2.0 | - | 0.80 |
| **12 21 180** | | 7 1/4 180 | | black lacquered | with plastic grips | - | 0.5-0.75 / 1.0 / 1.5 / 2.5 / 4.0 / 6.0 | 0.81 |

| | |
|---|---|
| **12 19 180** | 1 pair of spare blades for 12 11 180 |
| **12 29 180** | 1 pair of spare blades for 12 21 180 |

# Precision Insulation Strippers
with replaceable blades

- form-fit stripping of both standard and difficult-to-remove insulating materials made of PTFE, silicone, Radox®, Kapton® and rubber including multi-layer insulations
- a second pair of blades holds the remaining insulation reliably in place
- replaceable shaped blade adapted precisely to the respective conductor diameter
- includes length stop for consistent stripping length during repetitive work
- pliers body: steel
- blade: special tool steel; oil-hardened



**12 12 02**
PATENTED



12 12 02 is the only Precision Installation Strippers that has the cable guide



Precise, complete clean cut of the insulation



**12 12 12**
PATENTED



Quality stripping due to precise shape of the blades

**12 12 02**
The only tool with the cable guide for exact positioning of the cable in the stripping area of the blade

**12 12 11**
For solar cables; specially adapted to multi-layered and RADOX® insulations; with additional cable support for a better centering in the stripping profiles

**12 12 13 / 12 12 14**
For cables according to US specifications (AWG)

**Maximum cable cross-section (in mm²) per profile:**

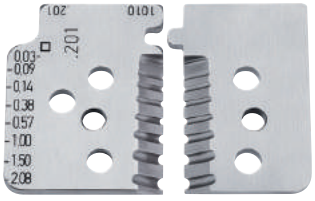

**12 12 02**

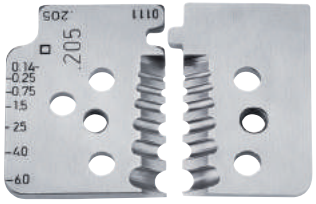

**12 12 06**

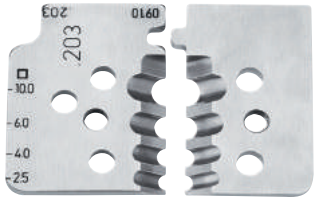

**12 12 10**

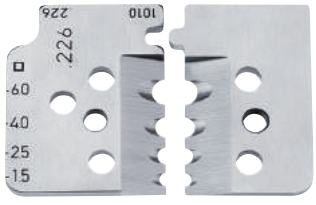

**12 12 11**

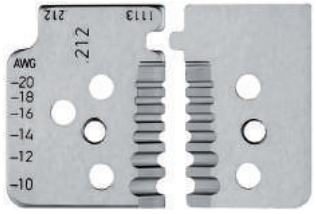

**12 12 13** - AWG Version

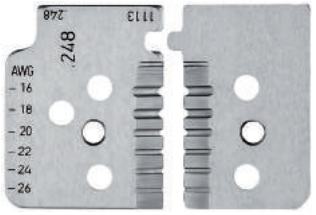

**12 12 14** - AWG Version

Radox® is a registered trademark of Huber & Suhner AG
Kapton® is a registered trademark of E. I. du Pont de Nemours and Company

**Principle of operation with shaped blades**

Proper and precise stripping with an annular cut through the complete insulation. This is particularly important with conductors, which must be stripped precisely.
This works without any problem even with difficult insulating materials made of PTFE, Radox® and multi-layer insulations.



## Precise and Reliable

Two pairs of blades (1) completely cut the insulation.

Then the blade pairs move apart, and the insulation is removed (2). The pliers opens automatically after the stripping procedure.

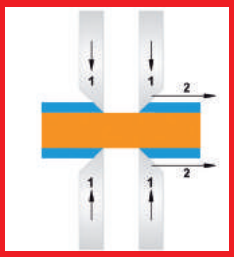


| Product Number | Packaging | ↔ Inch mm | | Pliers | Handles | Stripping capacities mm² | AWG | ⚖ lbs |
|---|---|---|---|---|---|---|---|---|
| **12 12 02** | | 7 3/4 195 | | burnished | multi-component grips | 0.03-0.09 / 0.14 / 0.38 / 0.57 / 1.0 / 1.5 / 2.08 | - | 0.99 |
| **12 12 06** | | 7 3/4 195 | | | | 0.14-0.25 / 0.75 / 1.5 / 2.5 / 4.0 / 6.0 | - | 0.98 |
| **12 12 10** | | 7 3/4 195 | | | | 2.5 / 4.0 / 6.0 / 10.0 | - | 0.98 |
| **12 12 11** | | 7 3/4 195 | | burnished | multi-component grips | 1.5 / 2.5 / 4.0 / 6.0 | - | 0.99 |
| **12 12 13** | | 7 3/4 195 | | burnished | multi-component grips | - | 10 / 12 / 14 / 16 / 18 / 20 | 0.99 |
| **12 12 14** | | 7 3/4 195 | | | | - | 16 / 18 / 20 / 22 / 24 / 26 | 0.99 |



# Self-Adjusting Insulation Strippers

12

- for single, multi and fine-stranded wire cables with plastic or rubber insulation; especially useful with THHN coated wire
- adapts automatically to the respective cable diameter preventing damage to the conductor
- cutting depth can be adjusted for different insulation by turning the red wheel
- includes wire cutter for copper and aluminum wires, multi-stranded up to 8 AWG (10 mm²) and single stranded up to 10 AWG (6 mm²)
- smooth operating mechanism
- replaceable blade and plastic clamping jaws
- the body is constructed of lightweight fiberglass-reinforced plastic
- blade: special tool steel; oil-hardened




**12 40 200**

**12 40 200**
For thin ribbon cables up to 10 mm width in a single pass


12 40 200: Adjustable length stop


12 40 200: Precise stripping prevents damage to the conductor



Wire cutter for multi-stranded wire cables up to 8 AWG (10 mm²)

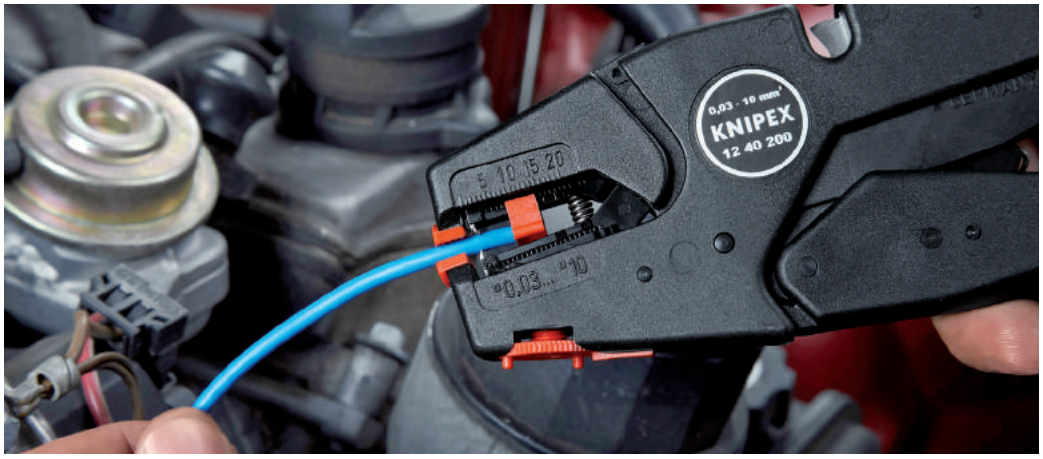


| Product Number | Packaging | ↔ Inch mm | | Stripping capacities mm² | AWG | Length stop Inch mm | ⚖ lbs |
|---|---|---|---|---|---|---|---|
| **12 40 200** | X | 8 200 | | 0.03 - 10.0 | 32 - 8 | 1/8 - 11/16 3.0 - 18.0 | 0.45 |
| **12 50 200** | | 8 200 | | 2.5 - 16.0 | 14 - 6 | - | 0.44 |

| | |
|---|---|
| **12 49 01** | 1 pair of spare blades for 12 40 200 |
| **12 49 02** | 1 pair of spare clamping jaws for 12 40 200 |
| **12 49 03** | Spare length stop for 12 40 200 |
| **12 59 01** | 1 pair of spare blades for 12 50 200 |
| **12 59 02** | 1 pair of spare clamping jaws for 12 50 200 |

# KNIPEX MultiStrip 10
# Automatic Insulation Stripper

12
42

Stripping without readjustment from 32–8 AWG
Universal blade geometry – tough and robust
Ideal grip design with excellent control
Recessed wire cutter

- automatic adjustment to all single-, multi and fine-stranded conductors with standard PVC insulation. Range of 32 AWG (0.03 mm²) to 8 AWG (10.0 mm²)
- no manual fine adjustment necessary
- no damage to the conductors
- steel clamping jaws with integrated cutting edges hold the cable and prevent slipping
- includes recessed wire cutter for Cu and Al conductors, stranded up to 8 AWG and single wire up to 10 AWG
- particularly smooth running mechanics and very low weight
- replaceable blades block and length stop
- handle with soft-plastic zone for a steady grip
- the body is constructed of lightweight fiberglass-reinforced plastic
- blade: special tool steel; oil-hardened
- **NOT FOR THHN CABLE**




**12 42 195**

MultiStrip




Wire cutter for multi-stranded wire cables up to 8 AWG (10 mm²)

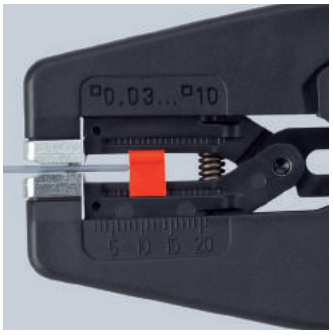


Steel clamping jaws avoid slipping of the cable

## Patented Mechanics

The incision depth of the stripping blade adjusts automatically to the diameter of the wire and to the thickness of all standard insulating materials.

There is no need for any of the manual adjustment still necessary when other conventional pliers with a wide wire-stripping range are used.

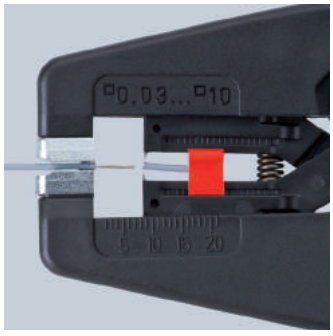


Precise stripping from 32–8 AWG without readjustment

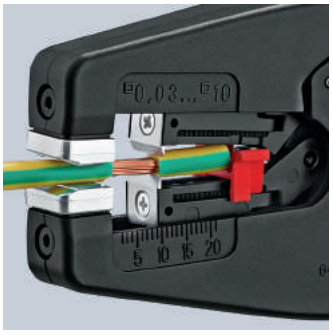


**Mode of operation of straight cutters**

An incision is made in the red area only.

Not suitable for highly-flexible or armored insulation materials or multi-layered insulation such as THHN.

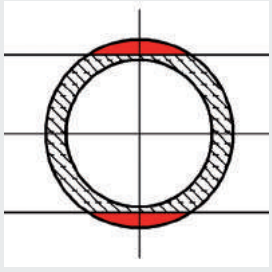

| Product Number | Packaging | ↔ Inch mm | | Stripping capacities mm² | AWG | ⚖ lbs |
|---|---|---|---|---|---|---|
| **12 42 195** | X | 7 1/2 190 | | 0.03 - 10.0 | 32 - 8 | 0.31 |

| | |
|---|---|
| **12 49 21** | Spare blades block for 12 42 195 |
| **12 49 23** | Spare length stop for 12 42 195 |

## Automatic Insulation Stripper

**12 62**

- compact standard tool at a favorable price for common cable diameters and insulating materials
- for single, multi and fine stranded cables of 24 AWG (0.2 mm²) up to 10 AWG (6 mm²) with standard PVC insulation
- adapts automatically to the respective cable diameter preventing damage to the conductor
- comfortable and lightweight for easy operation
- narrow head style for use in confined areas
- with wire cutter for copper and aluminum wires up to 14 AWG
- with adjustable length stop from 1/4"–11/16" (6.0–18.0 mm) for stripping the same lengths during repetitive work
- the body is constructed of lightweight fiberglass-reinforced plastic
- blades: special tool steel; oil-hardened, interchangeable




**12 62 180**

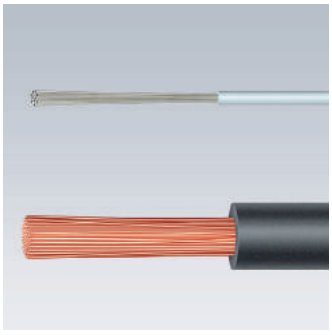

Precise stripping from 24 AWG to 10 AWG (0.2 up to 6.0 mm²)

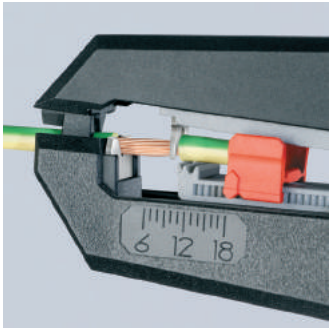


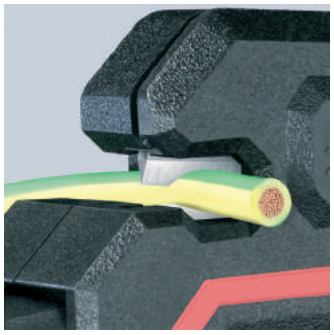

Wire cutter up to 14 AWG (2.5 mm²)




Stripping in confined areas

| Product Number | Packaging | ↔ Inch mm | | Stripping capacities mm² | AWG | ⚖ lbs |
|---|---|---|---|---|---|---|
| **12 62 180** | X | 7 1/4 180 | | 0.2 - 6.0 | 24 - 10 | 0.35 |

| | |
|---|---|
| **12 69 21** | 1 pair of spare blades for 12 62 180 |
| **12 69 23** | Spare length stop for 12 62 180 |

## Automatic Flat Cable Stripping Pliers

**12 64**

- for PVC-insulated flat cables up to a max. 15/32" (12 mm) width and 18 AWG - 14 AWG (0.75 to 2.5 mm²)
- adapts automatically to the various conductor heights which prevents damage to the conductor
- allows long stripping lengths
- replaceable blades
- smooth operating mechanism
- the body is constructed of lightweight fiberglass-reinforced plastic
- blade: special tool steel; oil-hardened




**12 64 180**

| Product Number | Packaging | ↔ Inch mm | | Stripping capacities in square inch mm² | ⚖ lbs |
|---|---|---|---|---|---|
| **12 64 180** | | 7 1/4 180 | | 0.75 - 2.5 | 0.27 |

| | |
|---|---|
| **12 69 31** | Spare blades for 12 64 180 |

## Automatic Stripping Pliers

For multicore cable Ø 4.4 to Ø 7.5 mm
with irregular sheathing cross-section

**12 74**

For control and sensor cables / actuator cables, also for stripping flexible 3-core feed cables and extension cable

Automatic adjustment to cable diameters between 4.4 and 7.5 mm

No damage to the inner conductor or shield braid

- allows cable to pass through center of pliers for mid-line strip or stripping longer lengths
- suitable for highly flexible PUR and PVC cable sheathing and rubber leads such as H05, etc.
- long stripping lengths possible
- body: plastic, fiberglass-reinforced
- exchangeable blades: special tool steel, oil-hardened



Sectional view of an extension lead



**12 74 180 SB**



Required stripping length easy to read



Complex cutter design for precise and damage-free stripping of round cables

| Product Number | Packaging | ↔ mm | Stripping capacities Ø mm | ⚖ lbs |
|---|---|---|---|---|
| **12 74 180 SB** | X | 175 | 4.4 - 7.5 | 0.26 |
| **12 79 31** | | 1 pair of spare blades for 12 74 180 SB | | |

## Mini Wire Stripper

**12 80**

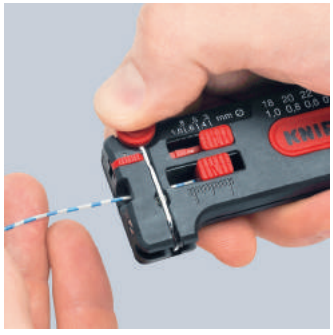



**12 80 040 SB**
For thin copper conductors dia. 36 – 26 AWG (0.12 to 0.4 mm)

**12 80 100 SB**
For thin copper conductors dia. 28 – 18 AWG (0.3 – 1.0 mm)

- precise stripping due to the tool's gradual adjustment to the conductor's diameter
- includes wire cutter
- adjustable length stop from 5/32" – 19/32" (4.0 – 15.0 mm)
- includes locking device
- housing: plastic, impact-resistant




**12 80 100 SB**

| Product Number | Packaging | ↔ Inch mm | | Stripping capacities Ø mm | AWG | ⚖ lbs |
|---|---|---|---|---|---|---|
| **12 80 040 SB** | X | 4 100 | | 0.12 - 0.4 | 36 - 26 | 0.08 |
| **12 80 100 SB** | X | 4 100 | | 0.30 - 1.0 | 28 - 18 | 0.08 |

# Electricians' Pliers 13

- the ideal 4-in-1 pliers for cable and wire work
- for gripping and bending wire
- for cutting medium and hard wire
- precision cutting edges induction hardened, cutting edge hardness (approx. 60 HRC)
- with precision stripping holes
- for crimping ferrules (end sleeves)
- vanadium steel; forged, multi-stage oil-hardened

**13 02 614 T BKA***
Pliers with integrated tether attachment point for tool drop protection system

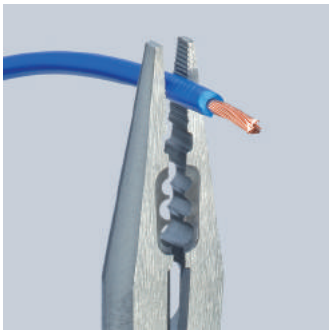
Gripping

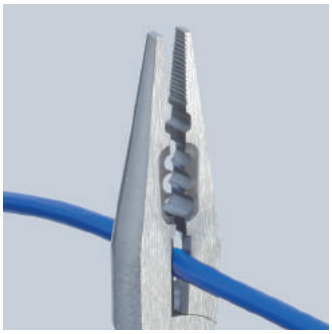
Cutting


Stripping

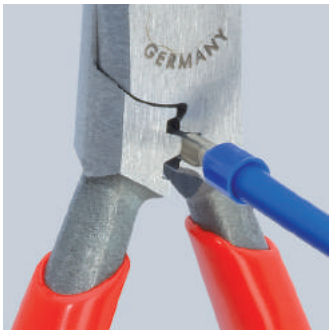

Crimping 20-14 AWG (0.5 to 2.5 mm²)

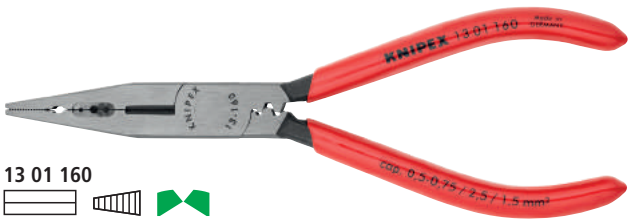

**13 01 160**

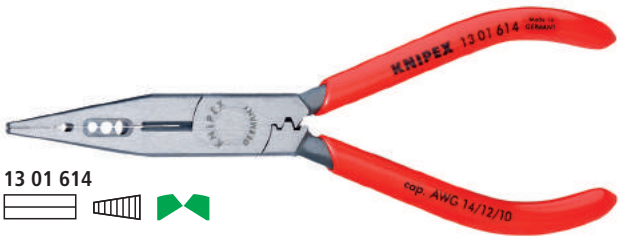

**13 01 614**



**13 02 160**



**13 02 614 T BKA**

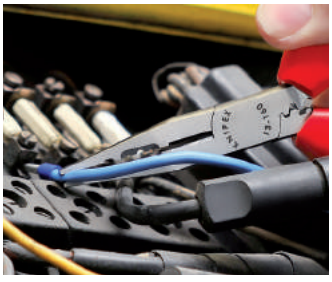

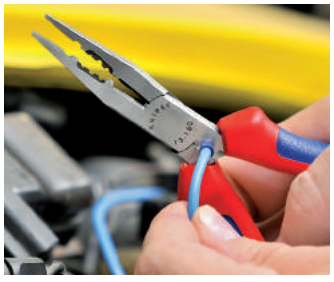

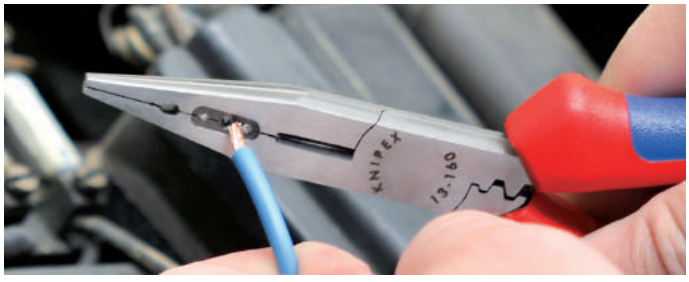


| Product Number | Packaging | ↔ Inch mm | | Pliers | Head | Handles | Cutting capacities ◑ Ø Inch Ø mm | Cutting capacities ◕ Ø Inch Ø mm | Stripping capacities mm² | AWG | ⚖ lbs |
|---|---|---|---|---|---|---|---|---|---|---|---|
| **13 01 160** | X | 6 1/4 160 | | black atramentized | polished | non-slip plastic coated | 3/32 2.5 | 1/16 1.6 | 0.5 - 0.75 / 1.5 / 2.5 | - | 0.24 |
| **13 02 160** | X | 6 1/4 160 | | | | multi-component grips | 3/32 2.5 | 1/16 1.6 | | | 0.31 |
| **13 01 614** | X | 6 1/4 160 | | black atramentized | polished | non-slip plastic coated | 3/32 2.5 | 1/16 1.6 | - | 10 / 12 / 14 | 0.25 |
| **13 02 614 T BKA** | X | 6 1/4 160 | | | | multi-component grips, integrated tether attachment point | 3/32 2.5 | 1/16 1.6 | - | | 0.32 |



*Learn more about our tethered tool system on pages 207-211

# Dismantling Pliers
DIN ISO 5746

13

Multifunctional – dismantling, stripping and cutting with one pair of pliers

For time-saving dismantling and stripping of all common round and damp-proof installation cables (e.g. NYM cable)

Simplified access especially to deeply mounted flush sockets due to slim head design and optimally angled cable sheath cutter

Strip cables easily and without damage thanks to circular cutting edge with depth limit

- dismantles outer sheath of cable easily and without damage due to the circular cutting edge with depth limit
- precision wire stripping holes for 1.5 and 2.5 mm² conductors
- integrated diagonal cutters for cutting and trimming conductors, wires, small screws and nails
- cutting blades induction hardened to (approx. 61 HRC)
- 30% lighter in weight than comparable pliers
- slim head design allows for easy access into deeply mounted sockets







Circular cutting edge with depth limit: for easy dismantling without damaging the conductor insulation

**13 42 165**



Wire stripping holes for 1.5 and 2.5 mm² conductors



Cutting cable up to Ø 13 mm

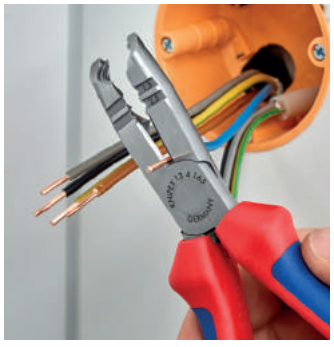

Cutting when shortening single conductors

| Product Number | Packaging | Inch / mm | | Pliers | Head | Handles | Dismantling capacities Ø mm | Stripping capacities Ø mm² | Ø mm | Ø mm | lbs |
|---|---|---|---|---|---|---|---|---|---|---|---|
| **13 42 165** | | 6 1/2 / 165 | | black atramentized | polished | with multi-component grips | 8 - 13 | 1.5 / 2.5 | 3.2 | 2.2 | 0.39 |

## Insulation strippers with Cable Shears – two essential electrical installation tools in one pair of pliers

- integrated cable shears for clean cutting of copper and aluminum cables without crushing
- universal adjustment of the wire stripping blades with knurled screw
- slim design allows for easy access into confined areas
- for stripping single, multiple and fine stranded conductors with plastic and rubber insulation up to a max. Ø 5 mm or 10 mm² conductor cross-section
- Graduated jaw is a visual guide when stripping wire in standard lengths 7/16" (11 mm) and 5/8" (16 mm)

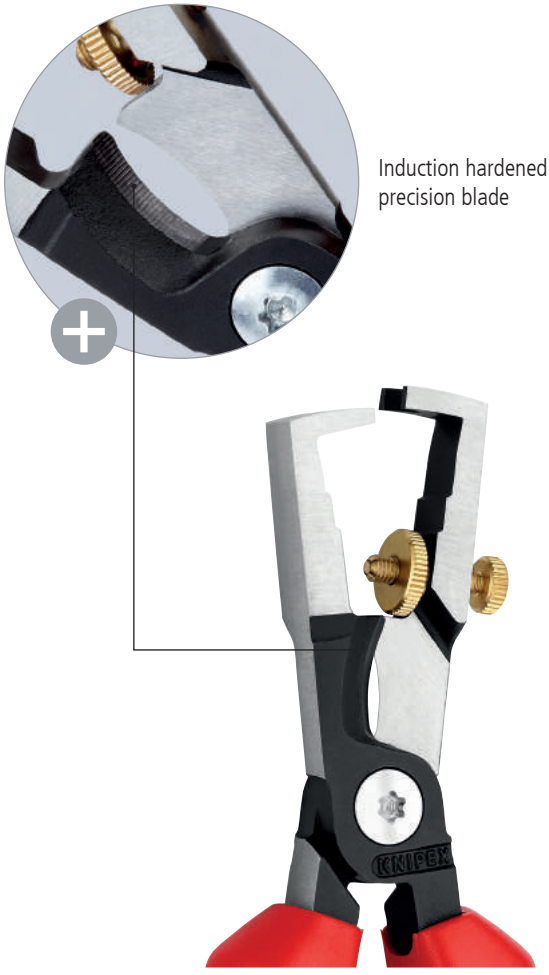




Induction hardened shear blade with precisely ground cutting edges for crushing-free cutting of copper cables up to 9/16" (15 mm Ø) (5 x 2.5 mm²)

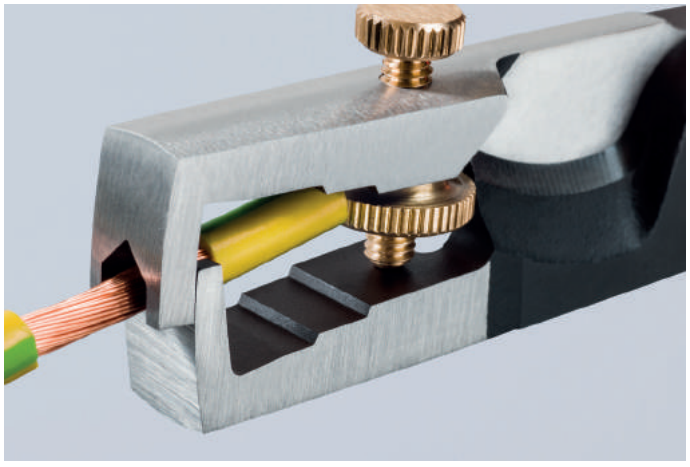

Lock nut prevents any unintentional adjustment

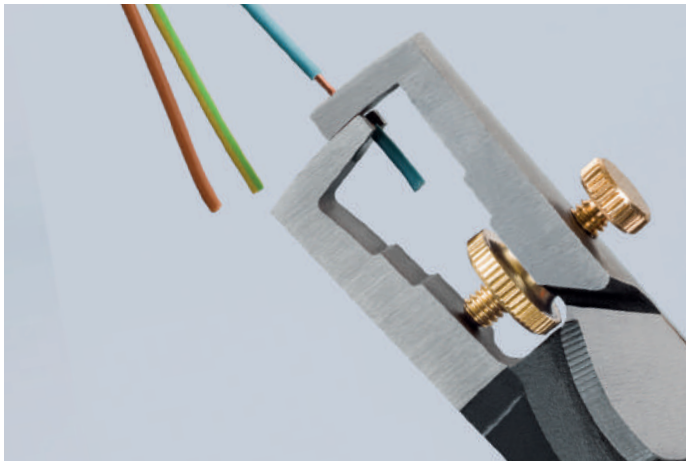

Visual length markings (steps) provide support during repeated stripping of wire in standard lengths 7/16" (11 mm) and 5/8" (16 mm)

| Product Number | Packaging | ↔ Inch mm | Pliers | Head | Handles | Cutting capacities Ø Inch Ø mm | Stripping capacities AWG | Ø mm | lbs |
|---|---|---|---|---|---|---|---|---|---|
| **13 62 180** | | 7 1/4 180 | black atramentized | polished | with multi-component grips | 9/16 15 | 8 | 5.0 | 0.44 |

# Installation Pliers 13

- multifunctional pliers for electrical installation with 6 functions; to grip flat and round material, for bending, deburring, cutting cable, stripping and crimping ferrules (end sleeves)
- smooth surfaces near the tips grip single conductors without damaging them; serrated gripping surfaces and pipe grip for gripping flat and round material
- clear-cut outside edge on the jaw for working on flush-mounted junction boxes and deburring feed-through holes
- stripping holes for 12 and 14 AWG (0.75 – 1.5 mm² and 2.5 mm²)
- crimp die for ferrules (end sleeves) 12 – 20 AWG (0.5 – 2.5 mm²)
- cable shears with induction hardened precision cutting edges for copper and aluminum cables up to 19/32" dia. (5 x 2.5 mm² / dia. 5 mm)
- slim dimensions for easy access in confined areas
- bolted joint: precise, zero-backlash operation of pliers
- high-grade special tool steel; forged, multi stage oil-hardened

**13 82 8 T BKA***
Pliers with integrated tether attachment point for tool drop protection system




**13 81 8**




**13 82 8**




**13 82 8 T BKA**




**13 88 8 US**
1000 V ASTM







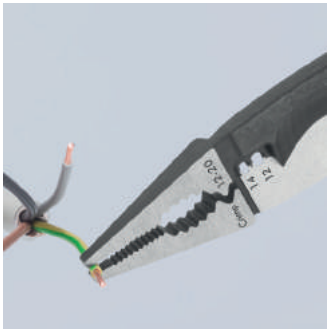



| Product Number | Packaging | ↔ Inch mm | | Pliers | Head | Handles | Cutting capacities Ø Inch | Cutting capacities AWG | Stripping capacities for cross-sections AWG | Crimping capacities AWG | lbs |
|---|---|---|---|---|---|---|---|---|---|---|---|
| **13 81 8** | X | 8 200 | | black atramentized | polished | non-slip plastic coated | 9/16 | 0 | 12 and 14 | 12 - 20 | 0.52 |
| **13 82 8** | X | 8 200 | | black atramentized | polished | multi-component grips | 9/16 | 0 | 12 and 14 | 12 - 20 | 0.59 |
| **13 82 8 T BKA** | X | 8 200 | | | | | 9/16 | 0 | 12 and 14 | 12 - 20 | 0.60 |
| **13 88 8 US** | X | 8 200 | 1000 V ASTM | black atramentized | polished | insulated, multi-component grips, ASTM-tested | 9/16 | 0 | 12 and 14 | 12 - 20 | 0.60 |

*Learn more about our tethered tool system on pages 207-211

## Wire Stripping Tweezers – Coated

15
11





> for stripping off varnished insulation on copper wires
> blades for other wire diameters available as spare parts
> tweezers body: spring steel, oil-hardened
> plastic handles

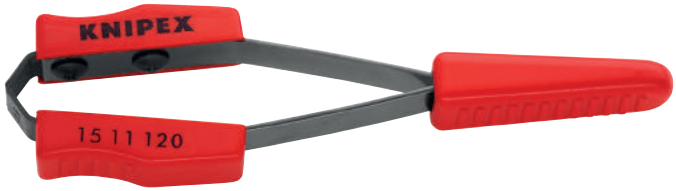


**15 11 120**

| Product Number | Packaging | ↔ Inch mm | Stripping capacities Ø Inch Ø mm | ⚖ lbs |
|---|---|---|---|---|
| **15 11 120** | | 4 3/4 120 | 1/64 0.6 | 0.08 |

| | |
|---|---|
| **15 19 005** | 1 pair of spare blades for 15 11 120 Ø 0.5 mm 1/64" |
| **15 19 006** | 1 pair of spare blades for 15 11 120 Ø 0.6 mm 1/64" |
| **15 19 008** | 1 pair of spare blades for 15 11 120 Ø 0.8 mm 1/32" |
| **15 19 010** | 1 pair of spare blades for 15 11 120 Ø 1.0 mm 3/64" |

## Insulation Strippers

15

> for stripping thin cables
> accurate boring to match diameter of wire, precise stripping prism; non-adjustable
> includes opening spring for easy repetitive work
> chrome vanadium electric steel; forged, oil-hardened




**15 51 160**



| Product Number | Packaging | ↔ Inch mm | | Head | Handles | Stripping capacities Ø Inch Ø mm | ⚖ lbs |
|---|---|---|---|---|---|---|---|
| **15 51 160** | | 6 1/4 160 | | polished | non-slip plastic coated | 1/64 0.5 | 0.24 |
| **15 61 160** | | 6 1/4 160 | | | | 1/64 0.6 | 0.24 |
| **15 81 160** | | 6 1/4 160 | | | | 1/32 0.8 | 0.24 |

# Dismantling Tools

16
20

- for stripping all common round cables
- self-tightening holding lever
- with adjusting screw for cutting depth adjustment
- turnable blade for circular and longitudinal cutting
- spare blade inside the handle
- secure grip due to soft component material on handle and holding lever to avoid slipping
- housing: plastic, impact-resistant

**16 20 165 SB**
With knife and hook blade, protective cap included



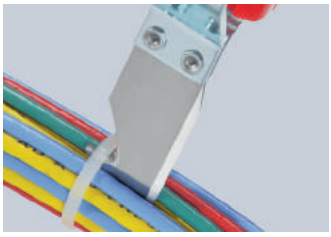




**16 20 16 SB**




**16 20 165 SB**

| Product Number | Packaging | ↔ Inch mm | | Stripping capacities Ø Inch Ø mm | ⚖ lbs |
|---|---|---|---|---|---|
| **16 20 16 SB** | X | 5 1/8 130 | | 3/16 - 5/8 4.0 - 16.0 | 0.17 |
| **16 20 165 SB** | X | 6 1/2 165 | | 5/16 - 1 1/8 8.0 - 28.0 | 0.18 |

| | |
|---|---|
| **16 29 165** | Spare blade for 16 20 16 SB / 16 20 165 SB |

# Dismantling Tool

16
30

- for dismantling round cable sheaths made of PVC, rubber, silicone or PTFE from 6.0 - 29.0 mm dia.
- self-tightening holding lever
- with knurled nut for cutting depth adjustment
- changing from circular to longitudinal cutting by turning the tool body
- spiral cutting for removing intermediate pieces
- replaceable blade
- housing: plastic, impact-resistant




**16 30 135 SB**


Setting the tool for circular cutting


Longitudinal cut


Spiral cutting

| Product Number | Packaging | ↔ Inch mm | | Stripping capacities Ø Inch Ø mm | ⚖ lbs |
|---|---|---|---|---|---|
| **16 30 135 SB** | X | 5 1/4 133 | | 1/4 - 1 1/8 6.0 - 29.0 | 0.22 |

| | |
|---|---|
| **16 39 135** | Spare blade for 16 30 135 SB |

## Dismantling Tool

16
40

- for dismantling round cables exceeding 1" (25.0 mm) dia.
- removes all kinds of insulation layers
- suitable for longitudinal and circular cutting
- cutting depth can be adjusted up to 13/64" (5.0 mm)
- replaceable blade (both sides can be used)
- tool body: plastic, fiberglass-reinforced




**16 40 150**



Adjustable cutting depth



Setting the tool for longitudinal cut



Longitudinal cut



Turning the tool for circumferential cut



Circular cut

| Product Number | Packaging | ↔ Inch mm | Stripping capacities Ø Inch Ø mm | ⚖ lbs |
|---|---|---|---|---|
| **16 40 150** | X | 6 150 | >1 >25 | 0.36 |

| | |
|---|---|
| **16 49 150** | Spare blade for 16 40 150 |

## Stripping Tool
for coaxial cables

16
60

- for stripping coaxial cables (RG 58, RG 59 and RG 62)
- for stripping outer sheath, shield and insulation in a single process
- with three built-in blades
- the cutting depth of each blade can be adjusted individually with hexagonal key (Allen key)
- the blade spacing remains constant
- housing: plastic, impact-resistant




**16 60 05 SB**



3 stripping steps in one operation

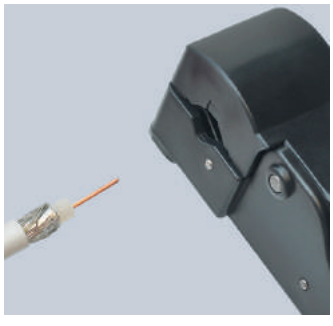

Interior layers uncovered individually

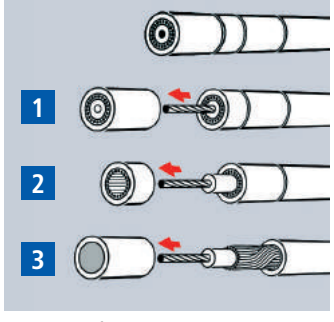


Dismantling of coaxial cable in three steps



| Product Number | Packaging | ↔ Inch mm | | Cable type | ⚖ lbs |
|---|---|---|---|---|---|
| **16 60 05 SB** | X | 4 1/8 105 | ⋀⋀⋀ | RG 58, RG 59 and RG 62 | 0.12 |

## Dismantling tool
for data cables

16 65

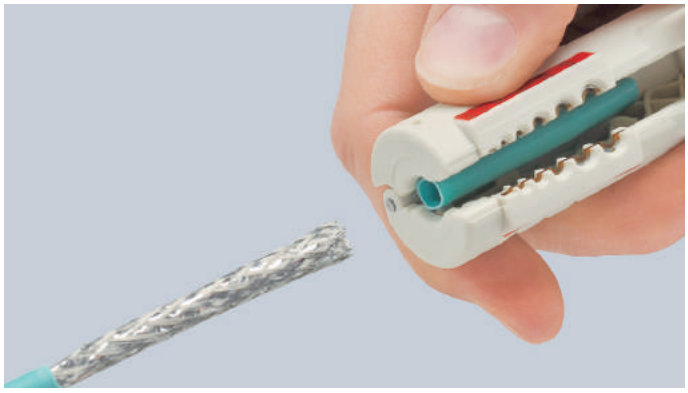

- for stripping UTP and STP data cables with diameters of 11/64" to 25/64" (4.5 to 10.0 mm)
- stripping device for 0.2 / 0.3 / 0.8 / 1.5 / 2.5 / 4.0 mm²
- double shell, folding back stripping tool
- with opening spring and locking lever
- clip for safe transport
- body: plastic, fiberglass-reinforced
- blades: special tool steel; oil-hardened, TiN-coated

**16 65 125 SB**



| Product Number | Packaging | ↔ Inch mm | | Cable type | Stripping capacities Ø Inch Ø mm | Stripping capacities mm² | ⚖ lbs |
|---|---|---|---|---|---|---|---|
| **16 65 125 SB** | X | 5 125 | | CAT 5, CAT 6, CAT 7, Twisted-Pair (UTP/STP) | 11/16 - 25/64 4.5 - 10.0 | 0.2 - 4.0 | 0.11 |

## Universal Dismantling Tools

16 8

- for dismantling and stripping all common round and damp-proof installation cables between 3 x 1.5 mm² up to 5 x 2.5 mm²
- for use in conduit and distribution boxes
- double shell, folding back stripping tool
- with opening spring and locking lever
- clip for safe transport
- body: plastic, fiberglass-reinforced

**16 85 125 SB**
With additional blade for longitudinal cuts; telescopic blade inside; stripping device for 0.2 / 0.3 / 0.8 / 1.5 / 2.5 / 4.0 mm²; with integrated cable guide for longitudinal cut. This enables rigid insulation (e.g. halogen-free) to be stripped easily







**16 80 125 SB**



**16 85 125 SB**

| Product Number | Packaging | ↔ Inch mm | | Stripping capacities Ø mm | Stripping capacities mm² | Cable type | ⚖ lbs |
|---|---|---|---|---|---|---|---|
| **16 80 125 SB** | X | 5 125 | | 8.0 - 13.0 | | round cable. e.g.: 3 x 1.5 mm² up to 5 x 2.5 mm² | 0.12 |
| **16 85 125 SB** | X | 5 125 | | 8.0 - 13.0 | 0.2 - 4.0 | round cable. e.g.: 3 x 1.5 mm² up to 5 x 2.5 mm² | 0.1 |

# KNIPEX ErgoStrip®
# Universal Dismantling Tool

**16 95**

For fast and precise dismantling and stripping of all common round and damp-proof installation cables (e.g. NYM cable 3 x 1.5 mm² up to 5 x 2.5 mm²), data cable and coax cable.

Innovative, ergonomic pistol grip design for easy cutting, stripping and longitudinal cutting of the sheath.

- conical, slim tool ends for better access in confined areas
- stripping holes for 0.2 / 0.3 / 0.8 / 1.5 / 2.5 / 4 mm²
- location ridges between stripping holes make for easy alignment of wire
- opening spring and locking device make the tool easy to open and secure
- easy insertion of coax and data cable
- multi-component design with a soft plastic zone for comfortable use and a secure grip
- housing: plastic, fiberglass-reinforced




**16 95 01 SB**
version for right-handers

PAT. PEND.

**16 95 02 SB**
version for left-handers

**16 95 02 SB**
ErgoStrip® L for left-handers

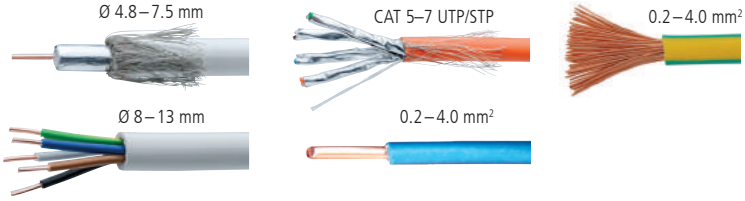


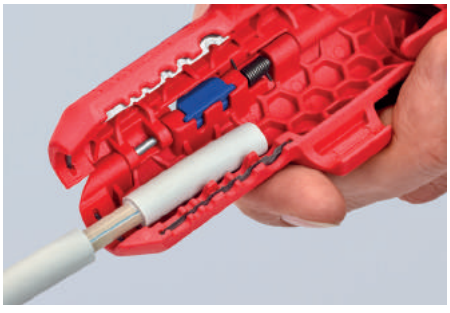
Stripping of NYM cable



Concealed cutting blade for stripping the outside cable sheath

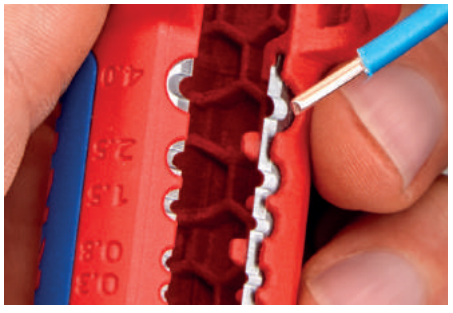
Stripping single conductor wire


Stripping data cable


Stripping coax cable sheath


Stripping the internal portion of the coax cable

| Product Number | Packaging | ↔ Inch mm | Version | | Wire stripping for round cable Ø mm | Wire stripping for conductors and strands mm² | Wire stripping for data cable | Wire stripping for coax cable Ø mm | ⚖ lbs |
|---|---|---|---|---|---|---|---|---|---|
| **16 95 01 SB** | X | 5 1/4 135 | Right-handed | | 8 - 13 | 0.2 - 4.0 | CAT 5 - 7 Twisted pair (UTP/STP) | 4.8 - 7.5 | 0.21 |
| **16 95 02 SB** | X | 5 1/4 135 | Left-handed | | 8 - 13 | 0.2 - 4.0 | CAT 5 - 7 Twisted pair (UTP/STP) | 4.8 - 7.5 | 0.21 |

## Round pliers
with cutting edge
Jewelers Pliers, DIN ISO 5743

19

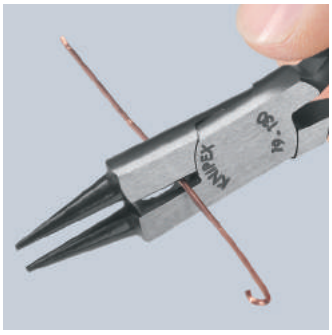

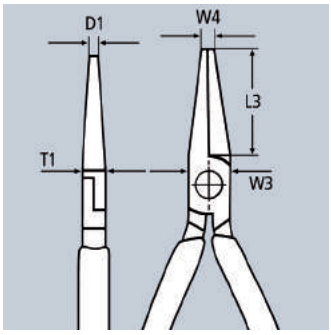


- for fine wire and working with jewelry
- ideal for cutting and bending work, also in electronics
- bending wire loops
- precision ground round jaws with fine, pointed tips
- cutting edges induction hardened (approx. 60 HRC)
- vanadium steel; forged, multi stage oil-hardened




**19 01 130**

| Product Number | Packaging | ↔ Inch mm | | Pliers | Head | Handles | Cutting capacities ◑ Ø Inch Ø mm | Cutting capacities ◕ Ø Inch Ø mm | Dimensions D1 Inch mm | L3 Inch mm | T1 Inch mm | W3 Inch mm | W4 Inch mm | ⚖ lbs |
|---|---|---|---|---|---|---|---|---|---|---|---|---|---|---|
| **19 01 130** | | 5 1/4 130 | | black atramentized | polished | non-slip plastic coated | 3/32 2.2 | 1/16 1.6 | 3/64 1.0 | 1 1/4 32.0 | 5/16 8.0 | 17/32 13.5 | 5/64 2.0 | 0.16 |

## Flat Nose Pliers
DIN ISO 5745

20

- flat, short, wide jaws
- knurled gripping surfaces
- special tool steel; forged, oil-hardened



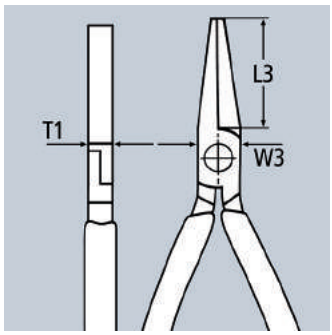


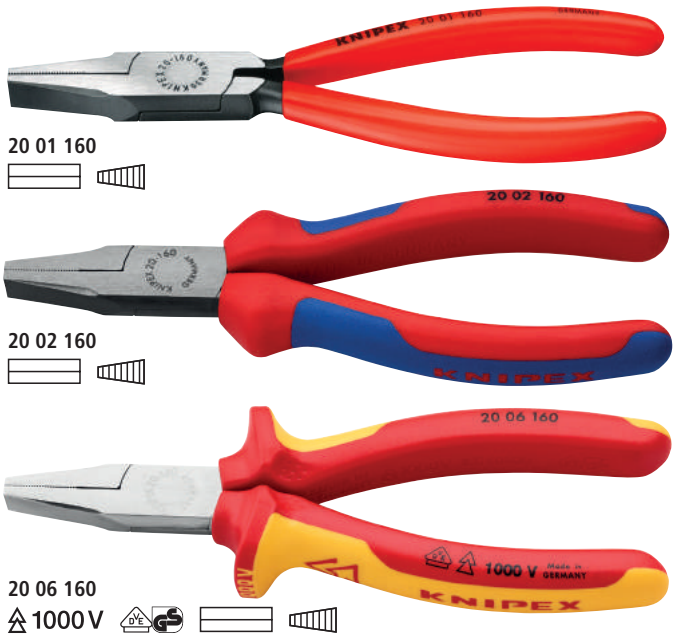


**20 01 160**

**20 02 160**

**20 06 160** 1000 V

| Product Number | Packaging | ↔ Inch mm | | Pliers | Head | Handles | Dimensions L3 Inch mm | Dimensions W3 Inch mm | Dimensions T1 Inch mm | ⚖ lbs |
|---|---|---|---|---|---|---|---|---|---|---|
| **20 01 125** | | 5 125 | | black atramentized | polished | non-slip plastic coated | 1 1/16 27.0 | 37/64 14.5 | 5/16 8.0 | 0.18 |
| **20 01 140** | | 5 1/2 140 | | | | | 1 7/64 28.0 | 39/64 15.5 | 3/8 9.5 | 0.24 |
| **20 01 160** | | 6 1/4 160 | | | | | 1 3/16 30.0 | 43/64 17.0 | 3/8 9.5 | 0.32 |
| **20 01 180** | | 7 1/4 180 | | | | | 1 3/8 35.0 | 3/4 19.0 | 25/64 10.0 | 0.41 |
| **20 02 140** | | 6 1/4 140 | | black atramentized | polished | multi-component grips | 1 3/32 28.0 | 39/64 15.5 | 3/8 9.5 | 0.30 |
| **20 02 160** | | 6 1/4 160 | | | | | 1 3/16 30.0 | 43/64 17.0 | 3/8 9.5 | 0.38 |
| **20 06 160** | | 6 1/2 165 | 1000 V | chrome plated | polished | insulated, multi-component grips, VDE-tested | 1 3/16 30.0 | 43/64 17.0 | 3/8 9.5 | 0.41 |

## Round Nose Pliers
DIN ISO 5745

**22**

- for bending wire loops
- round, short jaws; smooth ground
- smooth tips
- special tool steel; forged, oil-hardened



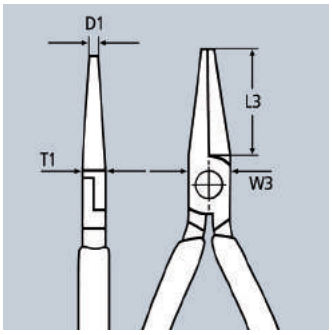




**22 01 160**



**22 02 160**



**22 08 160 SBA**
1000 V ASTM

| Product Number | Packaging | ↔ Inch mm | | Pliers | Head | Handles | Dimensions L3 Inch mm | W3 Inch mm | D1 Inch mm | T1 Inch mm | lbs |
|---|---|---|---|---|---|---|---|---|---|---|---|
| **22 01 125** | | 5 125 | | black atramentized | polished | non-slip plastic coated | 1 1/16 27.0 | 37/64 14.5 | 5/64 2.0 | 5/16 8.0 | 0.16 |
| **22 01 140** | | 5 1/2 140 | | | | | 1 7/64 28.0 | 21/32 16.5 | 3/32 2.5 | 3/8 9.5 | 0.22 |
| **22 01 160** | X | 6 1/4 160 | | | | | 1 3/16 30.0 | 45/64 18.0 | 1/8 3.0 | 3/8 9.5 | 0.30 |
| **22 02 140** | | 5 1/2 140 | | black atramentized | polished | multi-component grips | 1 7/64 28.0 | 21/32 16.5 | 3/32 2.5 | 3/8 9.5 | 0.29 |
| **22 02 160** | | 6 1/4 160 | | | | | 1 3/16 30.0 | 45/64 18.0 | 1/8 3.0 | 3/8 9.5 | 0.37 |
| **22 08 160 SBA** | X | 6 1/4 160 | 1000 V ASTM | black atramentized | polished | insulated with multi-component grips, ASTM-tested | 1 3/16 30.0 | 45/64 18.0 | 1/8 3.0 | 3/8 9.5 | 0.40 |

## Flat Nose Pliers with cutting edges
Precision Mechanics Pliers
DIN ISO 5745

**23**

- suitable for gripping and cutting work in fine mechanics
- flat, long and tapered jaws
- cutting edge hardness (approx. 60 HRC)
- high-grade special tool steel; forged, multi stage oil-hardened

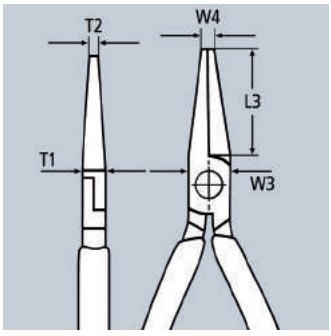




**23 01 140**

| Product Number | Packaging | ↔ Inch mm | | Head | Handles | Cutting capacities ◔ Ø Inch Ø mm | ◑ Ø Inch Ø mm | Dimensions T1 Inch mm | L3 Inch mm | W3 Inch mm | W4 Inch mm | T2 Inch mm | lbs |
|---|---|---|---|---|---|---|---|---|---|---|---|---|---|
| **23 01 140** | | 5 1/2 140 | | polished | plastic coated | 3/32 2.5 | 1/16 1.6 | 9/32 7.0 | 1 3/8 35.0 | 31/64 12.5 | 1/8 3.0 | 11/64 4.5 | 0.17 |

# Snipe Nose Side Cutting Pliers

Radio Pliers, DIN ISO 5745

25

- suitable for fine gripping and cutting work
- pointed, half-round jaws
- serrated gripping surfaces
- cutting edges for soft, medium hard and hard wire
- cutting edges induction hardened, cutting edge hardness (approx. 61 HRC)
- vanadium steel; forged, multi-stage oil-hardened

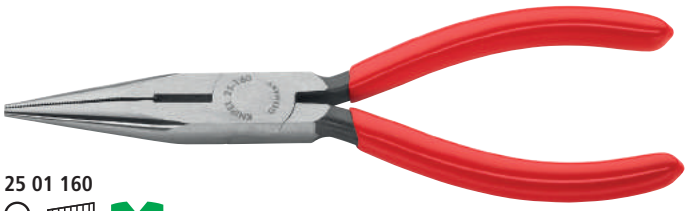

**25 01 160**




**25 02 160**




**25 08 160 SBA**

1000 V ASTM

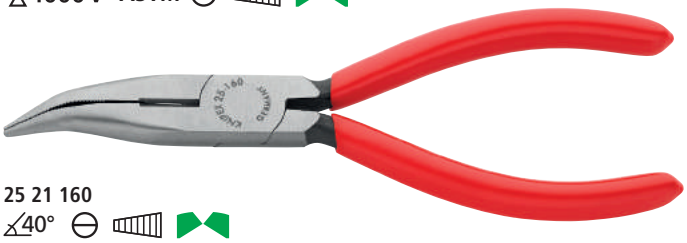

**25 21 160**

40°




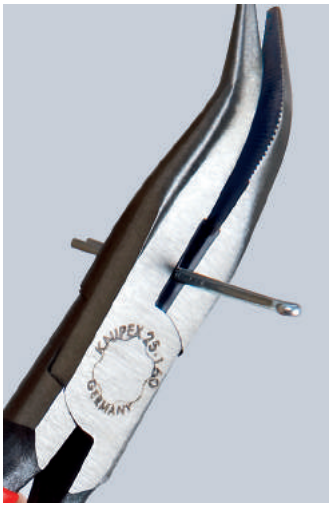


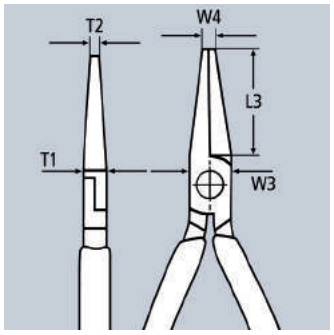


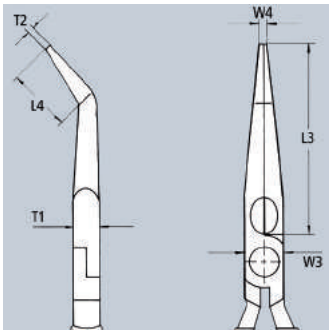


| Product Number | Packaging | ↔ Inch mm | | Pliers | Head | Handles | Cutting capacities ◑ Ø Inch Ø mm | Cutting capacities ◕ Ø Inch Ø mm | Dimensions L3 Inch mm | L4 Inch mm | W3 Inch mm | T1 Inch mm | W4 Inch mm | T2 Inch mm | lbs |
|---|---|---|---|---|---|---|---|---|---|---|---|---|---|---|---|
| **25 01 125** | | 5 125 | ⊖ | black atramentized | polished | plastic coated | 3/32 2.2 | 1/16 1.6 | 1 1/16 27.0 | - | 1/2 13.0 | 9/32 7.0 | 3/32 2.5 | 5/64 1.8 | 0.16 |
| **25 01 140** | | 5 1/2 140 | ⊖ | black atramentized | polished | plastic coated | 3/32 2.5 | 1/16 1.6 | 1 21/32 42.0 | - | 19/32 15.0 | 5/16 8.0 | 3/32 2.5 | 5/64 2.0 | 0.20 |
| **25 01 160** | X | 6 1/4 160 | ⊖ | black atramentized | polished | plastic coated | 3/32 2.5 | 1/16 1.6 | 1 31/32 50.0 | - | 21/32 16.5 | 23/64 9.0 | 1/8 3.0 | 3/32 2.5 | 0.25 |
| **25 02 140** | X | 5 1/2 140 | ⊖ | black atramentized | polished | multi-component grips | 3/32 2.5 | 1/16 1.6 | 1 21/32 42.0 | - | 19/32 15.0 | 5/16 8.0 | 3/32 2.5 | 5/64 2.0 | 0.24 |
| **25 02 160** | X | 6 1/4 160 | ⊖ | black atramentized | polished | multi-component grips | 3/32 2.5 | 1/16 1.6 | 1 31/32 50.0 | - | 21/32 16.5 | 23/64 9.0 | 1/8 3.0 | 3/32 2.5 | 0.32 |
| **25 08 160 SBA** | X | 6 1/4 160 | 1000 V ASTM ⊖ | black atramentized | polished | insulated, multi-component grips, ASTM-tested | 3/32 2.5 | 1/16 1.6 | 1 31/32 50.0 | - | 21/32 16.5 | 23/64 9.0 | 1/8 3.0 | 3/32 2.5 | 0.34 |
| **25 21 160** | X | 6 1/4 160 | 40° ⊖ | black atramentized | polished | plastic coated | 3/32 2.5 | 1/16 1.6 | 1 31/32 50.0 | 29/32 23.0 | 21/32 16.5 | 23/64 9.0 | 1/8 3.0 | 3/32 2.5 | 0.25 |

# Snipe Nose Side Cutting Pliers
Stork Beak Pliers, DIN ISO 5745

26

## Elastic tips: stable even when twisted

- distortion-tolerant, flexible precision tips
- half-round, long, pointed jaws
- hardened cutting edges (approx. 61 HRC) for soft, medium hard and hard wire
- vanadium steel; forged, multi-stage oil-hardened

**26 11 200 S1**
Integrated stripping hole in cutting blade. Strips 12 AWG wire

**26 12 200 T BKA / 26 22 200 T BKA***
Pliers with integrated tether attachment point for tool drop protection system

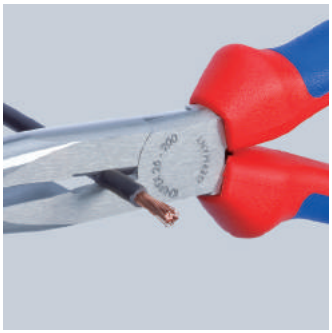



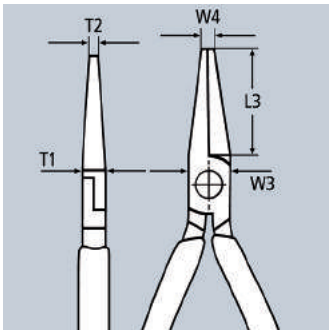


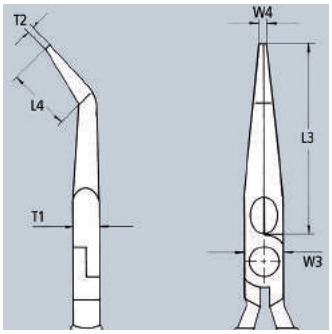





**26 11 200**

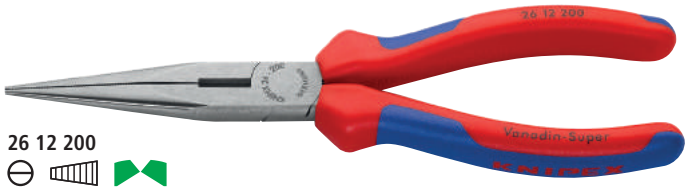


**26 12 200**

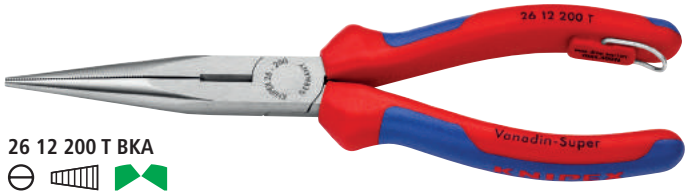


**26 12 200 T BKA**

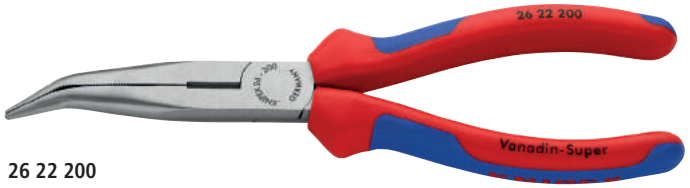


**26 22 200**
∡40°

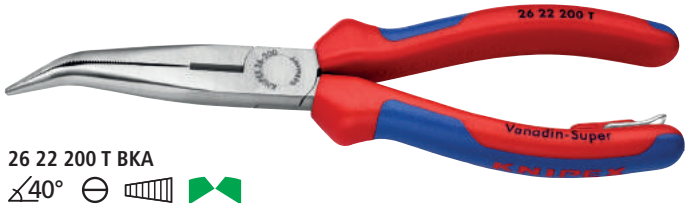


**26 22 200 T BKA**
∡40°

| Product Number | Packaging | ↔ Inch mm | | Pliers | Head | Handles | Cutting capacities Ø Inch Ø mm | | Dimensions L3 Inch mm | L4 Inch mm | T1 Inch mm | W3 Inch mm | W4 Inch mm | T2 Inch mm | lbs |
|---|---|---|---|---|---|---|---|---|---|---|---|---|---|---|---|
| **26 11 200** | X | 8 200 | | black atramentized | polished | plastic coated | 1/8 3.2 | 3/32 2.2 | 2 7/8 73.0 | - | 3/8 9.5 | 45/64 18.0 | 1/8 3.0 | 3/32 2.5 | 0.38 |
| **26 11 200 S1** | X | 8 200 | | | | | 1/8 3.2 | 3/32 2.2 | 2 7/8 73.0 | - | 3/8 9.5 | 45/64 18.0 | 1/8 3.0 | 3/32 2.5 | 0.38 |
| **26 12 200** | X | 8 200 | | black atramentized | polished | multi-component grips | 1/8 3.2 | 3/32 2.2 | 2 7/8 73.0 | - | 3/8 9.5 | 45/64 18.0 | 1/8 3.0 | 3/32 2.5 | 0.44 |
| **26 12 200 T BKA** | X | 8 200 | | black atramentized | polished | multi-component grips, integrated tether attachment point | 1/8 3.2 | 3/32 2.2 | 2 7/8 73.0 | - | 3/8 9.5 | 45/64 18.0 | 1/8 3.0 | 3/32 2.5 | 0.45 |
| **26 21 200** | X | 8 200 | ∡40° | black atramentized | polished | plastic coated | 1/8 3.2 | 3/32 2.2 | 2 7/8 73.0 | 29/32 23.0 | 3/8 9.5 | 45/64 18.0 | 1/8 3.0 | 3/32 2.5 | 0.38 |
| **26 22 200** | X | 8 200 | ∡40° | black atramentized | polished | multi-component grips | 1/8 3.2 | 3/32 2.2 | 2 7/8 73.0 | 29/32 23.0 | 3/8 9.5 | 45/64 18.0 | 1/8 3.0 | 3/32 2.5 | 0.43 |
| **26 22 200 T BKA** | X | 8 200 | ∡40° | black atramentized | polished | multi-component grips, integrated tether attachment point | 1/8 3.2 | 3/32 2.2 | 2 7/8 73.0 | 29/32 23.0 | 3/8 9.5 | 45/64 18.0 | 1/8 3.0 | 3/32 2.5 | 0.45 |



*Learn more about our tethered tool system on pages 207-211

# Snipe Nose Side Cutting Pliers

Stork Beak Pliers

DIN ISO 5745 IEC 60900 DIN EN 60900



- distortion-tolerant, flexible precision tips
- half-round, long, pointed jaws
- hardened cutting edges (approx. 61 HRC) for soft, medium hard and hard wire
- vanadium steel; forged, multi-stage oil-hardened

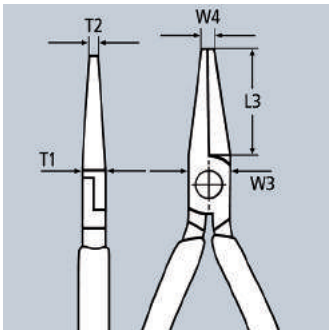





**26 18 200 US**

1000 V ASTM




**26 28 200 SBA**

40° 1000 V ASTM

| Product Number | Packaging | Inch mm | | Pliers | Head | Handles | Cutting capacities Ø Inch Ø mm | Ø Inch Ø mm | Dimensions L3 Inch mm | T1 Inch mm | W3 Inch mm | W4 Inch mm | T2 Inch mm | lbs |
|---|---|---|---|---|---|---|---|---|---|---|---|---|---|---|
| **26 18 200 US** | X | 8 200 | 1000 V ASTM | black atramentized | polished | insulated, multi-component handles, ASTM-tested | 1/8 3.2 | 3/32 2.2 | 2 7/8 73.0 | 3/8 9.5 | 45/64 18.0 | 1/8 3.0 | 3/32 2.5 | 0.45 |
| **26 28 200 SBA** | X | 8 200 | 40° 1000 V ASTM | black atramentized | polished | insulated, multi-component handles, ASTM-tested | 1/8 3.2 | 3/32 2.2 | 2 7/8 73.0 | 3/8 9.5 | 45/64 18.0 | 1/8 3.0 | 3/32 2.5 | 0.46 |



## Snipe Nose Pliers with Center Cutter

Telephone Pliers
DIN ISO 5743

27

> grips and separates single wires in harnesses
> center cutter for soft wire
> half-round jaws
> serrated gripping surfaces
> chrome vanadium electric steel; forged, oil-hardened

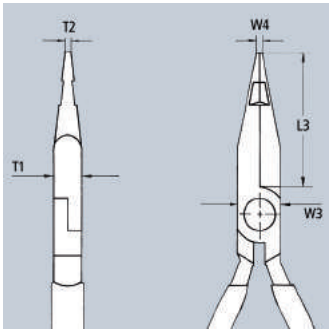








**27 01 160**

| Product Number | Packaging | ↔ Inch mm | | Head | Handles | Dimensions L3 Inch mm | W3 Inch mm | T1 Inch mm | W4 Inch mm | T2 Inch mm | ⚖ lbs |
|---|---|---|---|---|---|---|---|---|---|---|---|
| **27 01 160** | | 6 1/4<br>160 | | polished | plastic coated | 1 27/32<br>47.0 | 21/32<br>16.5 | 3/8<br>9.5 | 1/8<br>3.0 | 5/64<br>2.0 | 0.27 |

## Long Reach Needle Nose Pliers

DIN ISO 5743

28

> suitable for gripping and assembly work
> serrated gripping surfaces
> high-grade special tool steel; forged, oil-hardened

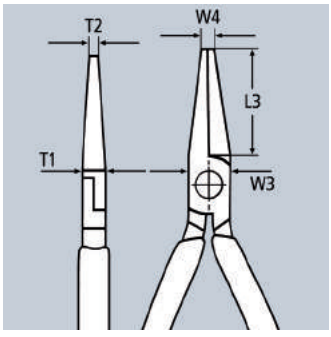




**28 01 200**



**28 21 200**

| Product Number | Packaging | ↔ Inch mm | | Pliers | Head | Handles | Dimensions L3 Inch mm | W3 Inch mm | T1 Inch mm | W4 Inch mm | T2 Inch mm | ⚖ lbs |
|---|---|---|---|---|---|---|---|---|---|---|---|---|
| **28 01 200** | | 8<br>200 | | black atramentized | polished | plastic coated | 1 19/64<br>33.0 | 17/32<br>13.5 | 13/32<br>10.5 | 5/32<br>4.0 | 13/32<br>10.5 | 0.43 |
| **28 21 200** | | 8<br>200 | | black atramentized | polished | plastic coated | 1 11/32<br>34.0 | 17/32<br>13.5 | 13/32<br>10.5 | 1/8<br>3.0 | 1/8<br>3.0 | 0.41 |

## Long assembly pliers with wave profile

Long slim design is perfect for gripping and assembly work in hard to reach areas

Deep parts can be easily reached using the slim, half-round tips

Grips up to 2 1/4"

- careful yet reliable gripping, holding and guiding of small copper pipes, screws and cables as well as other round parts due to milled grooves with smooth surfaces
- four small pulling grooves in jaws will grab tightly when holding and pulling round objects
- serrated gripping area for holding on to round parts near base of jaws
- particularly suitable for work in the automotive trade and in mechanical engineering
- slim yet robust tool
- forged from special tool steel; oil-hardened and tempered



**28 71 280**



**28 81 280**

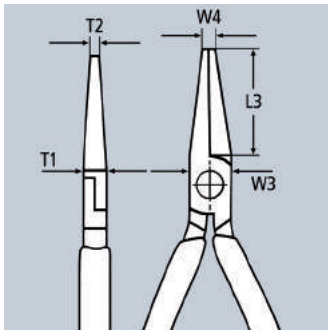


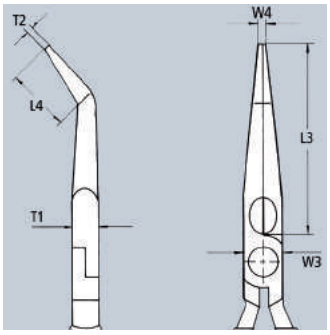


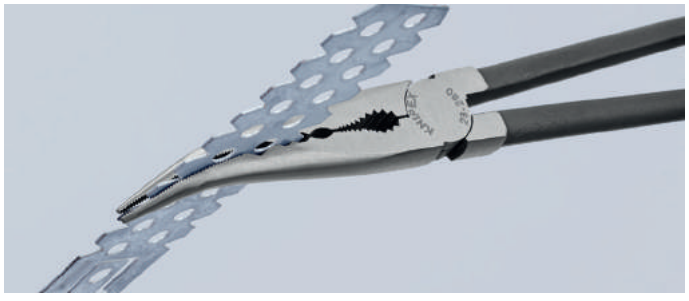

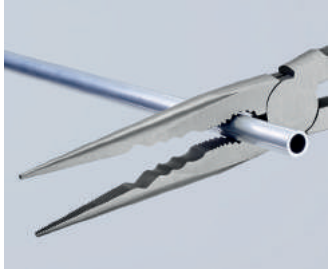

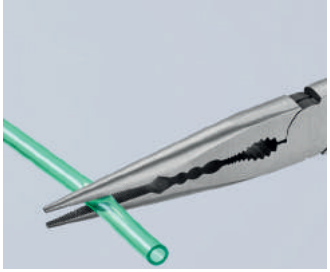

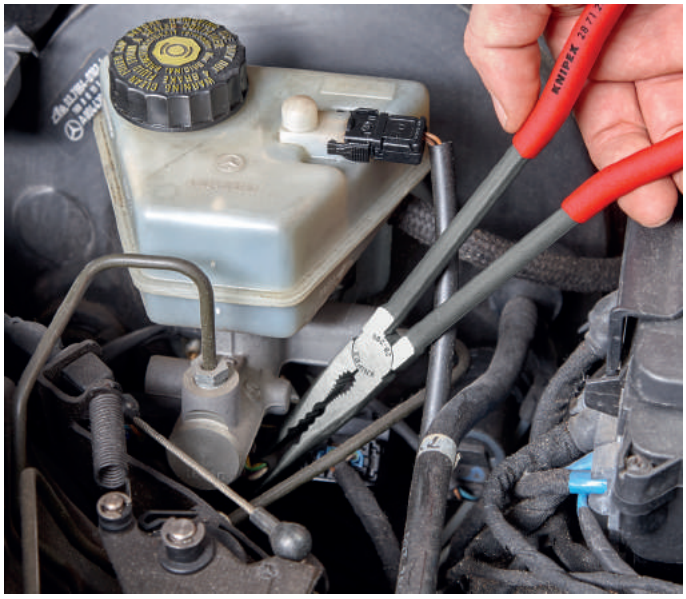

Transverse wave shape gripping profile for gripping, holding and guiding

| Product Number | Packaging | ↔ Inch / mm | | Pliers | Head | Handles | Dimensions L3 Inch / mm | L4 Inch / mm | W3 Inch / mm | T1 Inch / mm | W4 Inch / mm | T2 Inch / mm | ⚖ lbs |
|---|---|---|---|---|---|---|---|---|---|---|---|---|---|
| **28 71 280** | X | 11 / 280 | ⊖ | black atramentized | polished | non-slip plastic coated | 3 / 76.5 | - | 25/32 / 20.0 | 23/64 / 9.0 | 1/8 / 3.0 | 3/32 / 2.5 | 0.52 |
| **28 81 280** | X | 11 / 280 | 45° ⊖ | black atramentized | polished | non-slip plastic coated | 2 3/4 / 70.0 | 25/32 / 20.0 | 25/32 / 20.0 | 23/64 / 9.0 | 3/32 / 2.5 | 3/32 / 2.5 | 0.52 |

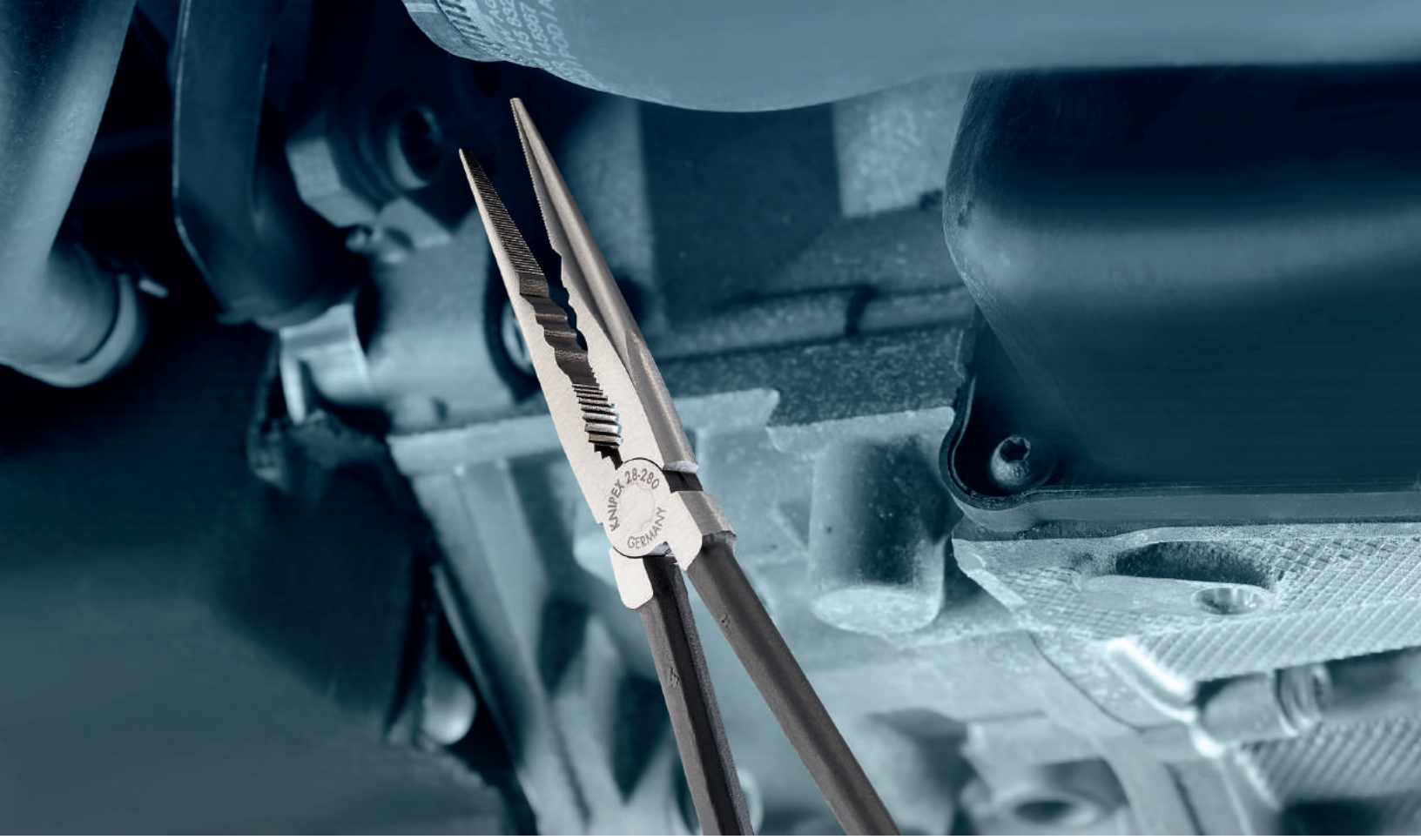


# Telephone Pliers
DIN ISO 5745

29

- cross-hatched gripping surfaces, knurled
- chrome vanadium electric steel; forged, oil-hardened

**29 21 160**
Extra slim fine tips; suitable for soldering work

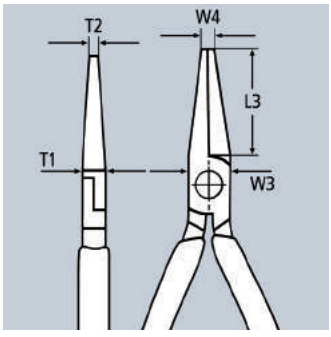


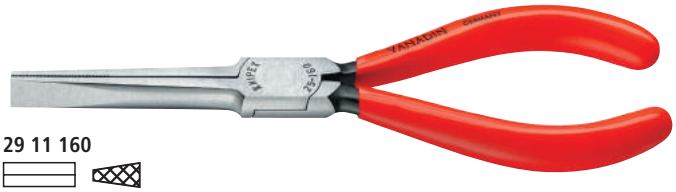


**29 11 160**




**29 21 160**

| Product Number | Packaging | ↔ Inch / mm | | Pliers | Head | Handles | Dimensions L3 Inch / mm | W3 Inch / mm | T1 Inch / mm | W4 Inch / mm | T2 Inch / mm | lbs |
|---|---|---|---|---|---|---|---|---|---|---|---|---|
| **29 11 160** | | 6 1/4 / 160 | | black atramentized | polished | plastic coated | 2 11/64 / 55.0 | 35/64 / 14.0 | 5/16 / 8.0 | 3/32 / 2.5 | 21/64 / 8.5 | 0.23 |
| **29 21 160** | | 6 1/4 / 160 | | black atramentized | polished | plastic coated | 2 1/8 / 54.0 | 35/64 / 14.0 | 23/64 / 9.0 | 5/64 / 2.0 | 5/64 / 2.0 | 0.25 |

# Long Nose Pliers
DIN ISO 5745

30

- heavy-duty gripping pliers
- different jaw styles for a wide range of applications
- chrome vanadium electric steel; forged, oil-hardened

**Style 1**
Long, trapezoidal jaws; serrated gripping surfaces

**Style 2**
Long, half-round jaws; serrated gripping surfaces

**Style 3**
Long, round jaws; smooth gripping surfaces

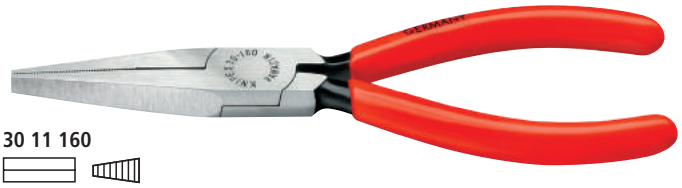

**30 11 160**

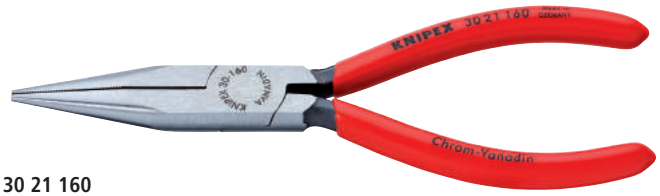


**30 21 160**




**30 36 160**
1000 V

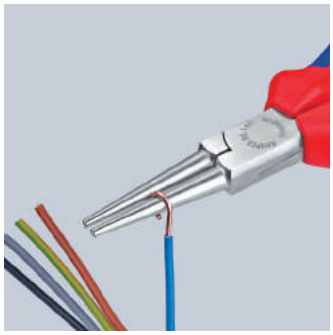

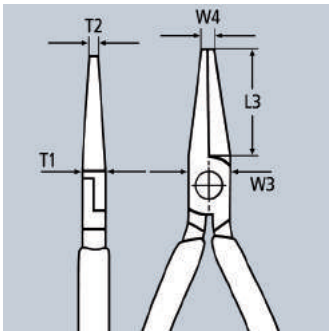




| Product Number | Packaging | ↔ Inch mm | | Pliers | Head | Handles | Style | Dimensions L3 Inch mm | W3 Inch mm | T1 Inch mm | W4 Inch mm | T2 Inch mm | ⚖ lbs |
|---|---|---|---|---|---|---|---|---|---|---|---|---|---|
| **30 11 140** | | 5 1/2 140 | | black atramentized | polished | plastic coated | 1 | 1 21/32 42.0 | 19/32 15.0 | 5/16 8.0 | 3/32 2.5 | 5/32 4.0 | 0.19 |
| **30 11 160** | | 6 1/4 160 | | | | | 1 | 1 53/64 46.5 | 21/32 16.5 | 3/8 9.5 | 1/8 3.0 | 13/64 5.0 | 0.27 |
| **30 11 190** | | 7 1/2 190 | | | | | 1 | 1 31/32 50.0 | 47/64 18.5 | 3/8 9.5 | 1/8 3.0 | 9/32 7.0 | 0.31 |
| **30 16 160** | | 6 1/4 160 | 1000 V | chrome plated | chrome plated | insulated, multi-component grips, VDE-tested | 1 | 1 53/64 46.5 | 21/32 16.5 | 3/8 9.5 | 1/8 3.0 | 13/64 5.0 | 0.33 |
| **30 21 140** | | 5 1/2 140 | | black atramentized | polished | plastic coated | 2 | 1 21/32 42.0 | 19/32 15.0 | 5/16 8.0 | 3/32 2.5 | 5/64 2.0 | 0.21 |
| **30 21 160** | | 6 1/4 160 | | | | | 2 | 1 31/32 50.0 | 21/32 16.5 | 3/8 9.5 | 1/8 3.0 | 3/32 2.5 | 0.27 |
| **30 21 190** | | 7 1/2 190 | | | | | 2 | 1 31/32 50.0 | 47/64 18.5 | 5/16 8.0 | 1/8 3.0 | 3/32 2.4 | 0.30 |
| **30 31 160** | | 6 1/4 160 | | black atramentized | polished | plastic coated | 3 | 1 19/32 41.0 | 21/32 16.5 | 3/8 9.5 | 13/64 5.0 | 3/32 2.5 | 0.24 |
| **30 36 160** | | 6 1/4 160 | 1000 V | chrome plated | chrome plated | insulated, multi-component grips, VDE-tested | 3 | 1 19/32 41.0 | 21/32 16.5 | 3/8 9.5 | 13/64 5.0 | 3/32 2.5 | 0.31 |

## Halogen Bulb Exchange Pliers

30
41

- for the installation of wedge bulb lamps
- plastic coated gripping surfaces
- chrome vanadium electric steel; forged, oil-hardened




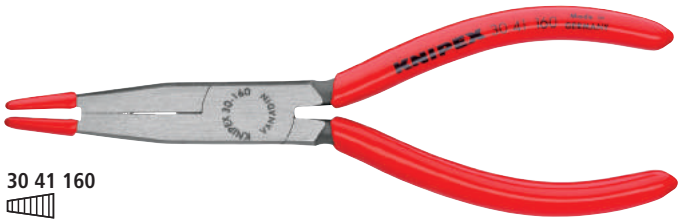


**30 41 160**

| Product Number | Packaging | ↔ Inch mm | | Pliers | Head | Handles | ⚖ lbs |
|---|---|---|---|---|---|---|---|
| **30 41 160** | | 6 1/4<br>160 | | black atramentized | polished | plastic coated | 0.29 |

## Gripping Pliers

Needle Nose Pliers, DIN ISO 5743

31

- precision pliers for assembly, bending and adjusting work
- with extra-long jaws: length of jaws 2 11/64" (55.0 mm)
- smooth gripping surfaces and edges
- chrome vanadium electric steel; forged, oil-hardened



**31 11 160**

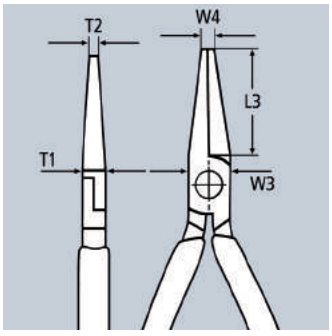


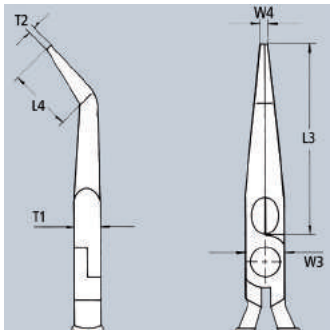





**31 21 160**

45°

| Product Number | Packaging | ↔ Inch mm | | Pliers | Head | Handles | Dimensions L3 Inch mm | L4 Inch mm | W3 Inch mm | T1 Inch mm | W4 Inch mm | T2 Inch mm | ⚖ lbs |
|---|---|---|---|---|---|---|---|---|---|---|---|---|---|
| **31 11 160** | | 6 1/4<br>160 | | black atramentized | polished | plastic coated | 2 11/64<br>55.0 | - | 5/8<br>16.0 | 19/64<br>7.5 | 5/64<br>1.8 | 3/32<br>2.5 | 0.22 |
| **31 21 160** | | 6 1/4<br>160 | 45° | black atramentized | polished | plastic coated | 2 11/64<br>55.0 | 1 1/16<br>27.0 | 5/8<br>16.0 | 19/64<br>7.5 | 5/64<br>1.8 | 3/32<br>2.5 | 0.21 |

## Relay Adjusting Pliers
DIN ISO 5743

32

> perfect for gripping small wires and bending contact and relay springs
> polished gripping surfaces
> smooth edges
> high-grade special tool steel; forged, oil-hardened

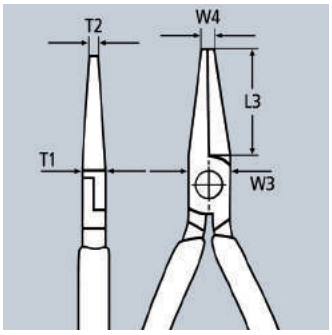





32 11 135




32 21 135




32 31 135
40°

| Product Number | Packaging | ↔ Inch mm | | Pliers | Head | Handles | Dimensions L3 Inch mm | W3 Inch mm | T1 Inch mm | W4 Inch mm | T2 Inch mm | lbs |
|---|---|---|---|---|---|---|---|---|---|---|---|---|
| **32 11 135** | | 5 1/4 135 | | black atramentized | polished | plastic coated | 1 11/32 34.0 | 31/64 12.5 | 9/32 7.0 | 1/16 1.4 | 1/16 1.5 | 0.17 |
| **32 21 135** | | 5 1/4 135 | | black atramentized | polished | plastic coated | 1 11/32 34.0 | 31/64 12.5 | 9/32 7.0 | 1/16 1.4 | 9/64 3.5 | 0.16 |
| **32 31 135** | | 5 1/4 135 | 40° | black atramentized | polished | plastic coated | 1 1/4 32.0 | 31/64 12.5 | 9/32 7.0 | 1/16 1.4 | 9/64 3.5 | 0.16 |

## Duckbill Pliers
DIN ISO 5743

33

> duckbill shaped jaws 23/64" (9.0 mm) wide at the tip and tapering to 1/16" (1.5 mm) thickness
> smooth gripping surfaces
> chrome vanadium electric steel; forged, oil-hardened

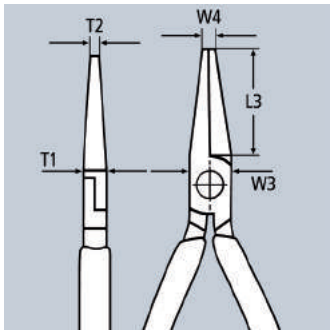


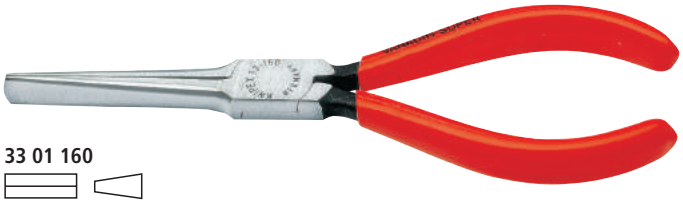

33 01 160

| Product Number | Packaging | ↔ Inch mm | | Pliers | Head | Handles | Dimensions L3 Inch mm | W3 Inch mm | T1 Inch mm | W4 Inch mm | T2 Inch mm | lbs |
|---|---|---|---|---|---|---|---|---|---|---|---|---|
| **33 01 160** | X | 6 1/4 160 | | black atramentized | polished | plastic coated | 2 11/64 55.0 | 19/32 15.0 | 19/64 7.5 | 1/8 3.0 | 23/64 9.0 | 0.23 |



**The Subtle Difference**

KNIPEX precision electronics pliers are made of high-quality ball bearing steel and processed with the highest degree of care. Each opening movement is gentle and even without backlash. Each work step proceeds reliably and precisely. This makes work much easier for professionals.

# Which Electronics Pliers is right for you?

KNIPEX has a full line of gripping and cutting electronics pliers. They are available in a variety of jaw types, joint and head styles, bevel types and can have additional features to make working with our products simple and easy

The gripping line is available in multiple jaw types and gripping surfaces, giving you options for choosing the pliers suited for your work. The cutting line is more expansive and has multiple products lines and pliers available to find the one best fit for you.



## Joint Type
Box joint, bolted and rivet

| | |
|---|---|
| Box joint |  |
| Bolted joint |  |
| Rivet joint |  |

## Head Type
Oval, tapered and end cutting

| | |
|---|---|
| Oval head |  |
| Tapered head |  |
| End cutting head |  |

## Bevel/Cutting Edge Type
Semi-flush, flush and super (ultra) flush

| | | | |
|---|---|---|---|
| 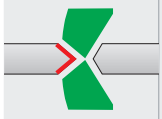 | with bevel (outside bevel) |  | semi-flush |
| 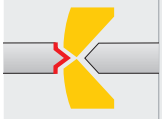 | with small bevel (outside bevel) | 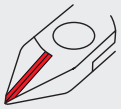 | semi-flush |
| 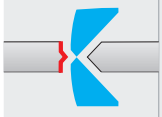 | with very small bevel (outside bevel) | 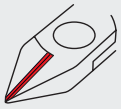 | semi-flush |
| 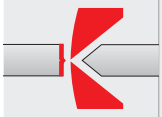 | without bevel (outside bevel) | 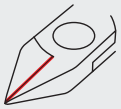 | flush |
| 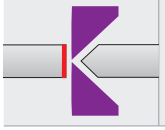 | flush cut |  | ultra or super flush |

## Handle Type
KNIPEX has multiple handle styles available (plastic dipped, single-component, multi-component, etc.) that can be broken down into two main categories for electronic pliers - ESD or Non-ESD

| Non-ESD | | ESD | |
|---|---|---|---|
| Plastic Dipped |  | ESD |  |
| Single-component |  | | |
| Multi-component |  | | |

### Joint Type
There are three joint types available: Box joint, Bolted joint and Rivet joint.

- Box joint is used in some of our most popular product lines including our water pump pliers and is proven for precision and durability with its high torsion resistance.
- Bolted joint provides the most precision and a permanently even cutting movement making it a perfect fit for repetitive type applications.
- Rivet joint offers the most economical pick of the joint types.

### Head Type
There are three head styles available in our cutting pliers: Oval, Tapered and End Cutting.

- Oval style is the most durable due to the additional material close to the cutting edges.
- Tapered has a narrowed head which allows for easier access into tight places.
- End Cutting head style is best for hard-to reach areas and for working on components from above.

### Bevel Type
A bevel is a slopping surface on the outer side of the cutting edge.

- A small bevel leads to an easier and more flush cut while the risk of damaging the cutting edges rises (overloading).
- A larger bevel allows hard materials to be cut without the risk of damage to the cutting edges.
- Depending on the size of the bevel, you will get either a semi-flush, flush or ultra-flush cut finish. The choice of bevel depends on the material being cut and the desired flush cut end result. A flush cutting edge is only suitable for soft materials such as copper or plastics.

### Handle Type
Our four handle styles are plastic dipped, single-component, multi-component and ESD.

- ESD stands for Electrostatic Discharge. The handles themselves discharge electrostatic energy in a gradual and controlled manner to protect electrical components.
- Plastic dipped is our most basic handle and is easy to maintain and clean of oils and residues.
- Our component handles offer comfort and ease of use making them great for repetitive work where comfort is a key need.

### Additional Features
Other features include lead catcher, double springs and carbide cutting edges.

## ESD pliers
Semi-flush, flush and super (ultra) flush

- Electrostatic energy is discharged through the handles in a gradual and controlled manner
- ESD handles protect electrical components from electrostatic discharge
- KNIPEX ESD handles are in accordance with applicable standards
  - IEC TR 61 340-5
  - DIN EN 61 340-5
  - SP Method 2472



# Precision Electronics Gripping Pliers
DIN ISO 9655

34

- for very precise assembly work, e.g. in electronics and fine mechanics
- for gripping, holding and bending
- smoothly ground gripping surfaces
- approx. 20% lighter than conventional electronics pliers
- bolted joint and carefully manufactured joint surfaces for even, low-friction movement throughout the entire opening range
- double spring for a gentle and even opening
- ergonomically optimized handles
- ball bearing chrome steel; forged, manifold oil-hardened

**Style 1**
Flat, wide jaws

**Style 2**
Half-round jaws

**Style 3**
Round, pointed jaws

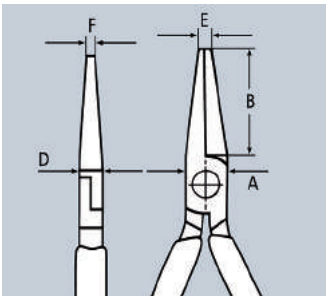


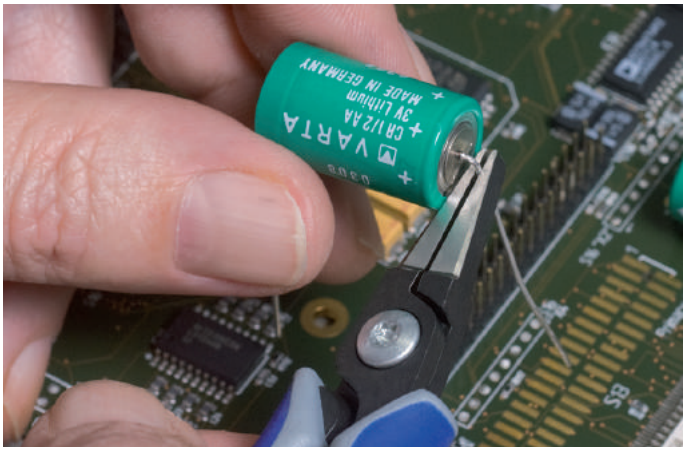





**34 12 130**




**34 22 130 ESD**




**34 32 130**



**34 42 130**



**34 52 130 ESD**

**ESD pliers (electrostatic discharge)**

Electrostatic energy is discharged through the handles in a gradual and controlled manner which protects components endangered by electrostatic discharge in accordance with applicable standards, e.g. IEC TR 61 340-5, DIN EN 61 340-5, SP Method 2472

| Product Number | Packaging | ↔ Inch mm | | Head | Handles | Style | Dimensions A Inch mm | B Inch mm | D Inch mm | E Inch mm | F Inch mm | ⚖ lbs |
|---|---|---|---|---|---|---|---|---|---|---|---|---|
| **34 12 130** | | 5 1/4 130 | | polished | multi-component grips | 1 | 7/16 11.2 | 55/64 21.9 | 1/4 6.5 | 1/16 1.4 | 9/64 3.5 | 0.14 |
| **34 12 130 ESD** | | 5 1/4 130 | | polished | ESD multi-component grips | 1 | 7/16 11.2 | 55/64 21.9 | 1/4 6.5 | 1/16 1.4 | 9/64 3.5 | 0.14 |
| **34 22 130** | | 5 1/4 130 | | polished | multi-component grips | 2 | 7/16 11.2 | 57/64 22.7 | 1/4 6.5 | 1/16 1.6 | 1/16 1.6 | 0.14 |
| **34 22 130 ESD** | | 5 1/4 130 | | polished | ESD multi-component grips | 2 | 7/16 11.2 | 57/64 22.7 | 1/4 6.5 | 1/16 1.6 | 1/16 1.6 | 0.14 |
| **34 32 130** | | 5 1/4 130 | | polished | multi-component grips | 3 | 7/16 11.2 | 15/16 23.7 | 1/4 6.5 | 5/64 2.0 | 3/64 1.0 | 0.14 |
| **34 32 130 ESD** | | 5 1/4 130 | | polished | ESD multi-component grips | 3 | 7/16 11.2 | 15/16 23.7 | 1/4 6.5 | 5/64 2.0 | 3/64 1.0 | 0.14 |
| **34 42 130** | | 5 1/4 130 | | polished | multi-component grips | 4 | 7/16 11.2 | 55/64 21.9 | 1/4 6.5 | 1/16 1.6 | 9/64 3.5 | 0.14 |
| **34 42 130 ESD** | | 5 1/4 130 | | polished | ESD multi-component grips | 4 | 7/16 11.2 | 55/64 21.9 | 1/4 6.5 | 1/16 1.6 | 9/64 3.5 | 0.14 |
| **34 52 130** | | 5 1/4 130 | | polished | multi-component grips | 5 | 7/16 11.2 | 55/64 21.9 | 1/4 6.5 | 1/16 1.6 | 1/16 1.6 | 0.14 |
| **34 52 130 ESD** | | 5 1/4 130 | | polished | ESD multi-component grips | 5 | 7/16 11.2 | 55/64 21.9 | 1/4 6.5 | 1/16 1.6 | 1/16 1.6 | 0.14 |



Sets of pliers can be found on page 203

# Electronics Pliers
DIN ISO 9655

35

- precision pliers for ultra fine assembly work in electronics and fine mechanics
- designed for gripping, holding and bending small components
- sturdy, zero backlash
- smooth gripping surfaces and rounded edges prevent damage to components
- low-friction double spring for gentle and even opening
- the mirror polish, together with a fine film of oil, offer effective rust protection – no circuit faults caused by peeling chrome from plated tools
- ball bearing chrome steel

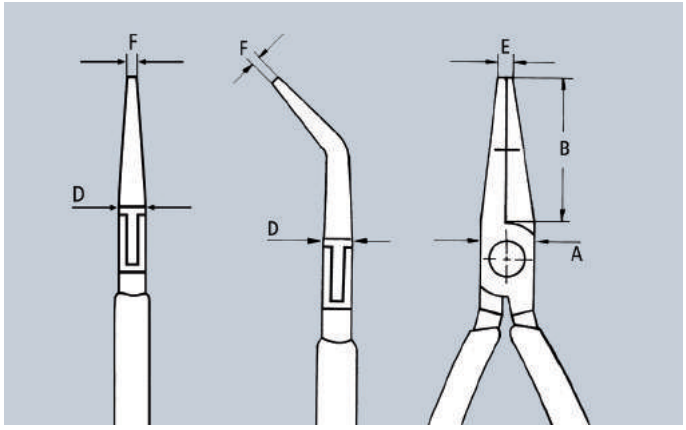





**35 11 115**




**35 22 115**



**35 32 115**



**35 42 115**



**35 52 145**



**35 62 145**



**35 72 145**



**35 82 145**

| Product Number | Packaging | ↔ Inch mm | | Head | Handles | Dimensions A Inch mm | B Inch mm | D Inch mm | E Inch mm | F Inch mm | ⚖ lbs |
|---|---|---|---|---|---|---|---|---|---|---|---|
| **35 11 115** | | 4 1/2 115 | | mirror polished | slim plastic grips | 3/8 9.5 | 57/64 22.5 | 17/64 6.7 | 5/64 2.0 | 5/32 4.0 | 0.13 |
| **35 12 115** | X | 4 1/2 115 | | mirror polished | multi-component grips | 3/8 9.5 | 57/64 22.5 | 17/64 6.7 | 5/64 2.0 | 5/32 4.0 | 0.16 |
| **35 21 115** | | 4 1/2 115 | | mirror polished | slim plastic grips | 3/8 9.5 | 57/64 22.5 | 17/64 6.7 | 5/64 2.0 | 1/16 1.5 | 0.13 |
| **35 22 115** | | 4 1/2 115 | | mirror polished | multi-component grips | 3/8 9.5 | 57/64 22.5 | 17/64 6.7 | 5/64 2.0 | 1/16 1.5 | 0.16 |
| **35 31 115** | | 4 1/2 115 | | mirror polished | slim plastic grips | 3/8 9.5 | 57/64 22.5 | 17/64 6.7 | 5/64 2.0 | 3/64 1.0 | 0.13 |
| **35 32 115** | | 4 1/2 115 | | mirror polished | multi-component grips | 3/8 9.5 | 57/64 22.5 | 17/64 6.7 | 5/64 2.0 | 3/64 1.0 | 0.16 |
| **35 41 115** | | 4 1/2 115 | | mirror polished | single-component grips | 3/8 9.5 | 57/64 22.5 | 17/64 6.7 | 5/64 2.0 | 1/16 1.5 | 0.16 |
| **35 42 115** | | 4 1/2 115 | | mirror polished | multi-component grips | 3/8 9.5 | 57/64 22.5 | 17/64 6.7 | 5/64 2.0 | 1/16 1.5 | 0.16 |
| **35 52 145** | | 5 3/4 145 | | mirror polished | multi-component grips | 15/32 12.0 | 1 37/64 40.0 | 19/64 7.5 | 1/16 1.5 | 5/32 4.0 | 0.23 |
| **35 62 145** | | 5 3/4 145 | | mirror polished | multi-component grips | 15/32 12.0 | 1 37/64 40.0 | 19/64 7.5 | 3/32 2.5 | 1/16 1.5 | 0.23 |
| **35 72 145** | | 5 3/4 145 | | mirror polished | multi-component grips | 15/32 12.0 | 1 37/64 40.0 | 19/64 7.5 | 3/32 2.5 | 3/64 1.3 | 0.23 |
| **35 82 145** | | 5 3/4 145 | | mirror polished | multi-component grips | 15/32 12.0 | 1 3/8 35.0 | 19/64 7.5 | 3/32 2.5 | 3/64 1.0 | 0.23 |

Sets of pliers can be found on page 203

# Electronics Pliers ESD
DIN ISO 9655



- precision pliers for ultra fine assembly work in electronics and fine mechanics
- designed for gripping, holding and bending small components
- electrically discharging handles – dissipative
- precision box joint
- smooth gripping surfaces and rounded edges prevent damage to components
- low-friction double spring for gentle and even opening
- the mirror polish, together with a fine film of oil, offer the best possible rust protection – no circuit faults caused by peeling chrome from plated tools
- ball bearing chrome steel

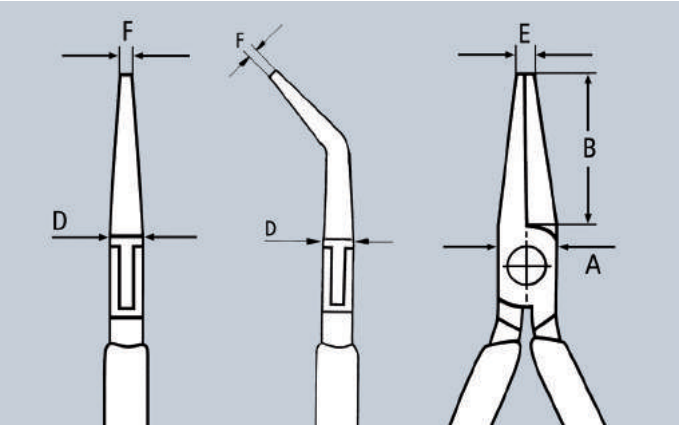


**ESD pliers (electrostatic discharge)**

Electrostatic energy is discharged through the handles in a gradual and controlled manner which protects components endangered by electrostatic discharge in accordance with applicable standards, e.g. IEC TR 61 340-5, DIN EN 61 340-5, SP Method 2472






**35 12 115 ESD**




**35 22 115 ESD**




**35 32 115 ESD**




**35 42 115 ESD**

| Product Number | Packaging | ↔ Inch / mm | | Head | Handles | Dimensions A Inch / mm | B Inch / mm | D Inch / mm | E Inch / mm | F Inch / mm | ⚖ lbs |
|---|---|---|---|---|---|---|---|---|---|---|---|
| **35 12 115 ESD** | | 4 1/2 / 115 | | mirror polished | ESD multi-component grips | 3/8 / 9.5 | 57/64 / 22.5 | 17/64 / 6.7 | 5/64 / 2.0 | 5/32 / 4.0 | 0.16 |
| **35 22 115 ESD** | | 4 1/2 / 115 | | mirror polished | ESD multi-component grips | 3/8 / 9.5 | 57/64 / 22.5 | 17/64 / 6.7 | 5/64 / 2.0 | 1/16 / 1.5 | 0.16 |
| **35 32 115 ESD** | | 4 1/2 / 115 | | mirror polished | ESD multi-component grips | 3/8 / 9.5 | 57/64 / 22.5 | 17/64 / 6.7 | 5/64 / 2.0 | 3/64 / 1.0 | 0.15 |
| **35 42 115 ESD** | | 4 1/2 / 115 | | mirror polished | ESD multi-component grips | 3/8 / 9.5 | 57/64 / 22.5 | 17/64 / 6.7 | 5/64 / 2.0 | 1/16 / 1.5 | 0.16 |



Sets of pliers can be found on page 203

# Electronics Mounting Pliers
DIN ISO 5743

36

- precision pliers for very fine assembly and repair work in electronics
- for bending and cutting off wire ends on components
- precision box-joint for greater strength
- smooth gripping surfaces
- smooth edges
- low-friction double spring for gentle and even opening
- the mirror polish, together with a fine film of oil, offer the best possible rust protection - no circuit faults caused by peeling chrome from plated tools
- special tool steel, forged, oil-hardened




**36 12 130**




**36 22 125**




**36 32 125**

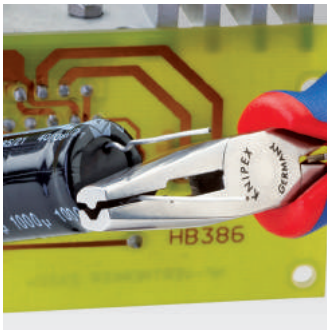


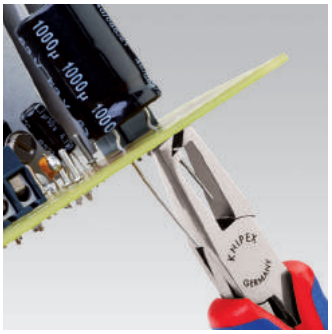

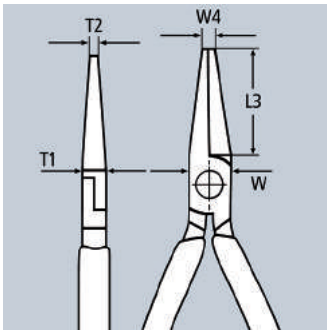


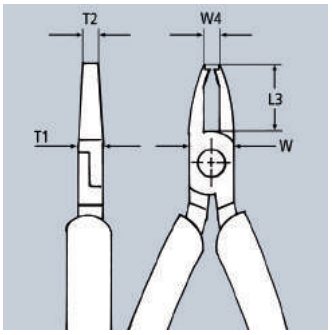


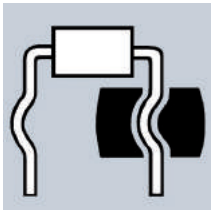

36 12 130
to bend wire in shape for the distance to the board

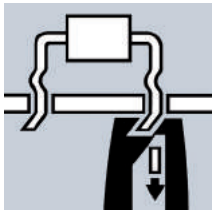

36 22 125
to bend and cut wire at 1/16" (1.6 mm) length below the board

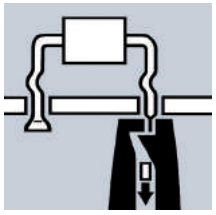

36 32 125
to crunch and cut wire at 1/16" (1.6 mm) length below the board

| Product Number | Packaging | ↔ Inch mm | | Head | Handles | Cutting capacities ◔ Ø Inch Ø mm | Dimensions L3 Inch mm | W Inch mm | T1 Inch mm | W4 Inch mm | T2 Inch mm | ⚖ lbs |
|---|---|---|---|---|---|---|---|---|---|---|---|---|
| **36 12 130** | | 5 1/4<br>130 | | mirror polished | multi-component grips | - | 29/32<br>23.0 | 15/32<br>12.0 | 3/8<br>9.5 | 7/32<br>5.5 | 15/64<br>6.0 | 0.21 |
| **36 22 125** | | 5<br>125 | | mirror polished | multi-component grips | 3/64<br>1.2 | 23/32<br>18.25 | 29/64<br>11.5 | 19/64<br>7.5 | 19/64<br>7.5 | 7/64<br>2.6 | 0.21 |
| **36 32 125** | | 5<br>125 | | mirror polished | multi-component grips | 3/64<br>1.2 | 23/32<br>18.25 | 29/64<br>11.5 | 19/64<br>7.5 | 19/64<br>7.5 | 5/32<br>4.0 | 0.21 |

# Gripping Pliers
for precision mechanics
DIN ISO 9655

37

- precision pliers for ultra fine assembly work, eg. in electronics and fine mechanics
- for gripping, holding, bending and adjusting
- smooth gripping surfaces and edges
- lap joint
- high-grade special tool steel; forged, oil-hardened

**Style 1**
Flat, wide jaws

**Style 2**
Flat, concave and pointed jaws

**Style 3**
Half-round jaws

**Style 4**
Round, pointed jaws to bend wire loops

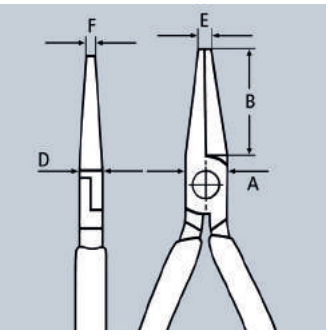





**37 11 125**

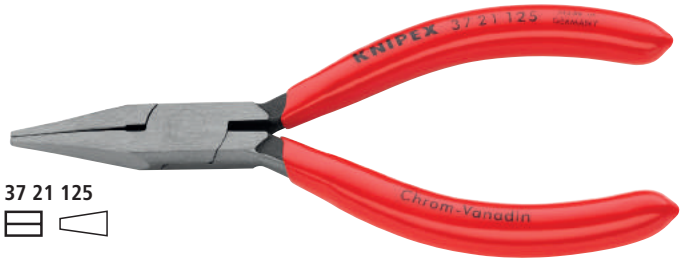


**37 21 125**




**37 31 125**




**37 41 125**

| Product Number | Packaging | ↔ Inch / mm | | Pliers | Head | Handles | Style | Dimensions B Inch / mm | A Inch / mm | D Inch / mm | E Inch / mm | F Inch / mm | lbs |
|---|---|---|---|---|---|---|---|---|---|---|---|---|---|
| **37 11 125** | | 5 / 125 | | black atramentized | polished | plastic coated | 1 | 1 1/16 / 27.0 | 31/64 / 12.5 | 9/32 / 7.0 | 5/64 / 2.0 | 7/32 / 5.5 | 0.17 |
| **37 21 125** | | 5 / 125 | | black atramentized | polished | plastic coated | 2 | 1 1/16 / 27.0 | 31/64 / 12.5 | 9/32 / 7.0 | 5/64 / 2.0 | 5/64 / 2.0 | 0.16 |
| **37 31 125** | | 5 / 125 | | black atramentized | polished | plastic coated | 3 | 1 1/16 / 27.0 | 31/64 / 12.5 | 9/32 / 7.0 | 5/64 / 2.0 | 1/16 / 1.6 | 0.16 |
| **37 41 125** | | 5 / 125 | | black atramentized | polished | plastic coated | 4 | 1 1/16 / 27.0 | 37/64 / 14.5 | 5/16 / 8.0 | 5/64 / 2.0 | 3/64 / 1.0 | 0.17 |

# Mechanics' Pliers
DIN ISO 5745

38

- high-strength jaws and tips bend and snap back into place
- cross-hatched gripping surfaces, knurled
- vanadium electric steel; forged, oil-hardened

**Style 1**
Long, half-round jaws; serrated gripping surfaces

**Style 2**
40° angled jaws

**Style 3**
Curved tips

**Style 4**
Long, trapezoidal jaws; serrated gripping surfaces

**Style 5**
70° angled jaws; suitable for pulling cotter pins and for hard to reach areas

**Style 6**
Double bent jaws

**Style 7**
45° angled, half-round jaws; suitable for gripping spark plugs and round components







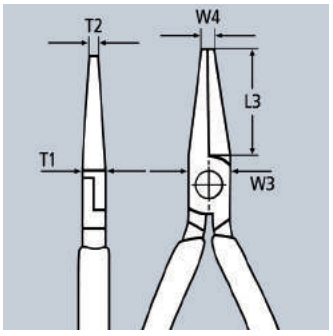




**38 11 200**



**38 21 200**
40°



**38 31 200**



**38 41 190**



**38 71 200**
70°



**38 81 200 A**



**38 81 200 B**



**38 91 200**
45°

| Product Number | Packaging | ↔ Inch mm | | Pliers | Head | Handles | Style | Dimensions L3 Inch mm | W3 Inch mm | T1 Inch mm | W4 Inch mm | T2 Inch mm | ⚖ lbs |
|---|---|---|---|---|---|---|---|---|---|---|---|---|---|
| **38 11 200** | | 8 200 | | black atramentized | polished | plastic coated | 1 | 2 7/8 73.0 | 11/16 17.5 | 3/8 9.5 | 1/8 3.0 | 3/32 2.5 | 0.40 |
| **38 21 200** | | 8 200 | 40° | black atramentized | polished | plastic coated | 2 | 2 7/8 73.0 | 11/16 17.5 | 3/8 9.5 | 1/8 3.0 | 3/32 2.5 | 0.39 |
| **38 31 200** | | 8 200 | | black atramentized | polished | plastic coated | 3 | 2 7/8 73.0 | 11/16 17.5 | 3/8 9.5 | 1/8 3.0 | 3/32 2.5 | 0.39 |
| **38 41 190** | | 7 1/2 190 | | black atramentized | polished | plastic coated | 4 | 1 31/32 50.0 | 45/64 18.0 | 5/16 8.0 | 5/32 4.0 | 5/16 8.0 | 0.33 |
| **38 71 200** | | 8 200 | 70° | black atramentized | polished | plastic coated | 5 | 2 7/8 73.0 | 11/16 17.5 | 3/8 9.5 | 1/8 3.0 | 5/64 2.0 | 0.40 |
| **38 81 200 A** | | 8 200 | | black atramentized | polished | plastic coated | 6 | 2 3/4 69.0 | 45/64 18.0 | 3/8 9.5 | 1/8 3.0 | 3/32 2.5 | 0.39 |
| **38 81 200 B** | | 8 200 | | black atramentized | polished | plastic coated | 6 | 2 3/64 62.0 | 45/64 18.0 | 3/8 9.5 | 1/8 3.0 | 3/32 2.5 | 0.39 |
| **38 91 200** | | 8 200 | 45° | black atramentized | polished | plastic coated | 7 | 2 7/8 73.0 | 11/16 17.5 | 3/8 9.5 | - | 3/32 2.5 | 0.39 |

# Universal Grip Pliers



- tightly holds round or flat material
- heavy-duty
- adjustment screw and release lever for easy use
- one-handed operation
- high clamping pressure due to toggle lever action
- pliers body: rolled steel, high-strength
- gripping jaws: chrome vanadium electric steel; forged

**40 14 250**
With pivoting bottom jaw that automatically adjusts to the workpiece no matter the shape



**40 04 250**



**40 14 250**

**WARNING:** This product can expose you to chemicals including Diisononyl Phthalate, which is known to the State of California to cause cancer. For more information go to

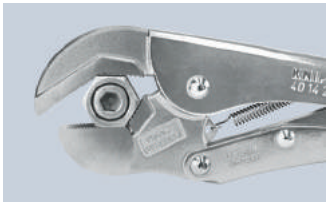



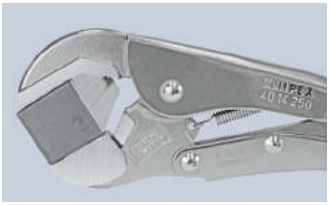



| Product Number | Packaging | ↔ Inch mm | | ○ Inch mm | ⬡ Inch mm | ⚖ lbs |
|---|---|---|---|---|---|---|
| **40 04 180** | | 7 1/4<br>180 | | 1 3/8<br>35 | 1 1/4<br>32 | 0.82 |
| **40 04 250** | | 10<br>250 | | 1 3/8<br>35 | 1 1/4<br>32 | 1.22 |
| **40 14 250** | | 10<br>250 | | 1 11/16<br>43 | 1 25/32<br>45 | 1.35 |



# Grip Pliers

41

- tightly holds round or flat material
- heavy-duty
- adjustment screw and release lever for easy use
- one-handed operation
- high clamping pressure due to toggle lever action
- pliers body: rolled steel, high-strength
- gripping jaws: chrome vanadium electric steel; forged

**Style 0**
Jaws for round workpieces, with wire cutter

**Style 1**
Jaws with double prism for round, section and flat material

**Style 2**
Straight jaws for flat material

**Style 3**
Long Nose Grip Pliers, narrow, long jaws

**Style 4**
Long Nose Grip Pliers, narrow long jaws very suitable for areas that are difficult to reach. Non-serrated gripping area for pinching off hoses









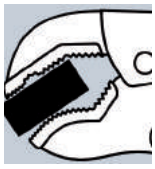



**41 04 250**



**41 14 250**



**41 24 225**



**41 34 165**



**41 44 200**
70°

**WARNING:** This product can expose you to chemicals including Diisononyl Phthalate, which is known to the State of California to cause cancer. For more information go to

| Product Number | Packaging | ↔ Inch / mm | | Pliers | Style | ○ Inch / mm | ⬡ Inch / mm | ⚖ lbs |
|---|---|---|---|---|---|---|---|---|
| **41 04 180** | | 7 1/4 / 180 | | bright zinc plated | 0 | 1 3/16 / 30 | 1 3/16 / 30 | 0.82 |
| **41 04 250** | | 10 / 250 | | | 0 | 1 37/64 / 40 | 1 3/16 / 30 | 1.23 |
| **41 04 300** | | 12 / 300 | | | 0 | 2 9/16 / 65 | 1 11/32 / 34 | 2.08 |
| **41 14 250** | | 10 / 250 | | bright zinc plated | 1 | 1 27/64 / 36 | 1 27/64 / 36 | 1.29 |
| **41 24 225** | | 9 / 225 | | bright zinc plated | 2 | 1 / 25 | 1 3/16 / 30 | 1.16 |
| **41 34 165** | | 6 1/2 / 165 | | bright zinc plated | 3 | 13/16 / 20 | 15/16 / 24 | 0.42 |
| **41 44 200** | | 8 / 200 | 70° | bright zinc plated | 4 | 13/16 / 20 | 1 3/16 / 30 | 0.88 |

# Welding Grip Pliers

42

- for gripping, clamping and holding of diverse profiles
- heavy-duty
- with adjustment screw and release lever
- one-handed operation
- high clamping pressure due to toggle lever action
- pliers body: rolled steel, high-strength

**42 14 280**
Heat resistant malleable cast iron jaws; section or flat material items lying side by side are held securely during welding; also for section material with vertical webs up to 1" (25 mm) height

**42 24 280**
Heat resistant malleable cast iron jaws; round or tubular material items lying centrally side by side are held securely during welding

**42 34 280**
Gripping jaws made of chrome vanadium steel, drop forged; clamp cumbersome workpieces and sections with high webs up to 1 37/64" (40 mm)

**42 44 280**
Pivoting jaws; gripping jaws made of chrome vanadium steel, drop forged; clamp and balance bulky work components and profiles with high ridges up to 1 37/64" (40 mm)



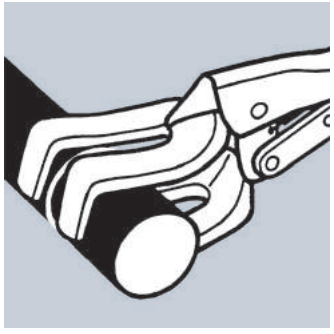

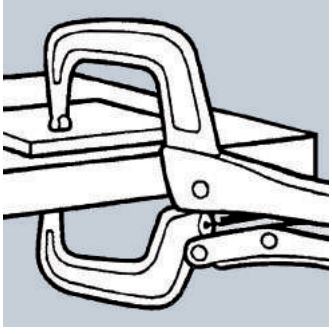





**42 14 280**



**42 24 280**

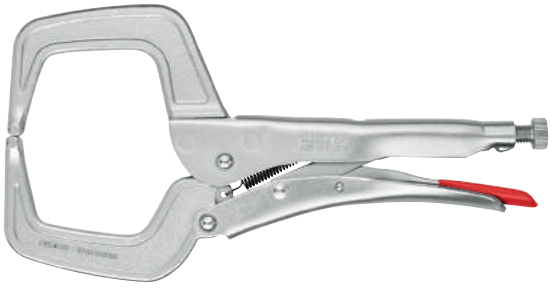

**42 34 280**



**42 44 280**

**WARNING:** This product can expose you to chemicals including Diisononyl Phthalate, which is known to the State of California to cause cancer. For more information go to

| Product Number | Packaging | ↔ Inch mm | Pliers | ○ Inch mm | □ Inch mm | ⚖ lbs |
|---|---|---|---|---|---|---|
| **42 14 280** | | 11<br>280 | bright zinc plated | 1 3/16 - 2 9/16<br>30-65 | - | 2.04 |
| **42 24 280** | | 11<br>280 | bright zinc plated | 25/64 - 2 3/4<br>10-70 | - | 2.02 |
| **42 34 280** | | 11<br>280 | bright zinc plated | - | 3 1/2<br>90 | 1.53 |
| **42 44 280** | | 11<br>280 | bright zinc plated | - | 3 1/2<br>90 | 1.65 |

## Circlip Pliers
for large internal circlips

**44**



**44 10 J6**

**44 20 J61** 90°

- for assembling snap rings into bores within the range of 4 51/64" – 16" (122-400 mm) dia.
- with locking device, can be released without completing cycle
- with replaceable tips made of tempered steel
- pliers body: rolled steel, high-strength
- tips: special tool steel; oil-hardened

**Style 1**
Straight tips

**Style 2**
90° angled tips

| Product Number | Packaging | ↔ Inch mm | | Pliers | Style | Size of bore Ø Inch Ø mm | Tips Ø Inch Ø mm | ⚖ lbs |
|---|---|---|---|---|---|---|---|---|
| **44 10 J5** | | 22 29/64 570 | | black powder-coated | 1 | 4 51/64 - 12 122 - 300 | 9/64 3.5 | 3.88 |
| **44 10 J6** | | 22 3/4 580 | | | 1 | 9 59/64 - 16 252 - 400 | 11/64 4.5 | 3.88 |
| **44 20 J51** | | 23 1/4 590 | 90° | black powder-coated | 2 | 4 51/64 - 12 122 - 300 | 9/64 3.5 | 4.00 |
| **44 20 J61** | | 23 1/2 600 | 90° | | 2 | 9 59/64 - 16 252 - 400 | 11/64 4.5 | 4.02 |

| | |
|---|---|
| **44 19 J5** | 1 pair of spare tips for 44 10 J5 |
| **44 19 J6** | 1 pair of spare tips for 44 10 J6 |
| **44 29 J51** | 1 pair of spare tips for 44 20 J51 |
| **44 29 J61** | 1 pair of spare tips for 44 20 J61 |

## Circlip Pliers
for large external circlips

**46**



**46 10 A5**

**46 20 A61** 90°

- for assembling snap rings on shafts, ranging from 4 51/64" – 16" (122 – 400 mm) dia.
- with locking device, can be released without completing cycle
- with replaceable tips made of tempered steel
- pliers body: rolled steel; high-strength
- tips: special tool steel; oil-hardened

**Style 1**
Straight tips

**Style 2**
90° angled tips

| Product Number | Packaging | ↔ Inch mm | | Pliers | Style | Size of shaft Ø Inch Ø mm | Tips Ø Inch Ø mm | ⚖ lbs |
|---|---|---|---|---|---|---|---|---|
| **46 10 A5** | | 22 560 | | black powder-coated | 1 | 4 51/64 - 12 122 - 300 | 9/64 3.5 | 3.91 |
| **46 10 A6** | | 22 29/64 570 | | | 1 | 9 59/64 - 16 252 - 400 | 11/64 4.5 | 3.96 |
| **46 20 A51** | | 22 29/64 570 | 90° | black powder-coated | 2 | 4 51/64 - 12 122 - 300 | 9/64 3.5 | 4.06 |
| **46 20 A61** | | 22 3/4 580 | 90° | | 2 | 9 59/64 - 16 252 - 400 | 11/64 4.5 | 4.11 |

| | |
|---|---|
| **46 19 A5** | 1 pair of spare tips for 46 10 A5 |
| **46 19 A6** | 1 pair of spare tips for 46 10 A6 |
| **46 29 A51** | 1 pair of spare tips for 46 20 A51 |
| **46 29 A61** | 1 pair of spare tips for 46 20 A61 |

# Circlip Pliers
for internal circlips in bore holes

44

- for fitting snap rings into bores, ranging from 5/16" to 5 1/2" (8 – 140 mm) dia.
- solid style, forged
- non-slip, solid tips
- pliers body and tips: chrome vanadium steel; forged, oil-hardened



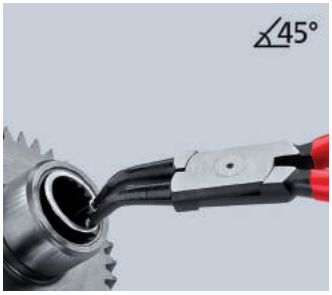


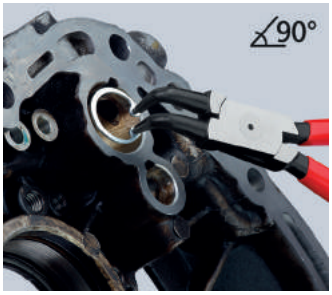





**44 11 J2**




**44 21 J21**
90°




**44 31 J22**
45°

**Style 1**
Straight tips

**Style 2**
90° angled tips

**Style 3**
45° angled tips

| Product Number | Packaging | ↔ Inch mm | | Pliers | Head | Handles | Style | Size of bore Ø Inch Ø mm | Tips Ø Inch Ø mm | ⚖ lbs |
|---|---|---|---|---|---|---|---|---|---|---|
| **44 11 J0** | X | 5 1/2 140 | | black atramentized | polished | plastic coated | 1 | 5/16 - 1/2 8 - 13 | 1/32 0.9 | 0.20 |
| **44 11 J1** | X | 5 1/2 140 | | | | | 1 | 15/32 - 1 12 - 25 | 3/64 1.3 | 0.20 |
| **44 11 J2** | X | 7 1/4 180 | | | | | 1 | 3/4 - 3/64 19 - 60 | 5/64 1.8 | 0.30 |
| **44 11 J3** | X | 9 225 | | | | | 1 | 1 37/64 - 3 15/16 40 - 100 | 3/32 2.3 | 0.43 |
| **44 11 J4** | X | 12 1/2 320 | | | | | 1 | 3 11/32 - 5 1/2 85 - 140 | 1/8 3.2 | 1.03 |
| **44 21 J01** | X | 5 1/8 130 | | black atramentized | polished | plastic coated | 2 | 5/16 - 1/2 8 - 13 | 1/32 0.9 | 0.19 |
| **44 21 J11** | X | 5 1/8 130 | | | | | 2 | 15/32 - 1 12 - 25 | 3/64 1.3 | 0.19 |
| **44 21 J21** | X | 6 3/4 170 | 90° | | | | 2 | 3/4 - 2 3/64 19 - 60 | 5/64 1.8 | 0.31 |
| **44 21 J31** | X | 8 1/2 215 | | | | | 2 | 1 37/64 - 3 15/16 40 - 100 | 3/32 2.3 | 0.43 |
| **44 21 J41** | X | 12 300 | | | | | 2 | 3 11/32 - 5 1/2 85 - 140 | 1/8 3.2 | 1.02 |
| **44 31 J02** | X | 5 1/2 140 | | black atramentized | polished | plastic coated | 3 | 5/16 - 1/2 8 - 13 | 1/32 0.9 | 0.20 |
| **44 31 J12** | X | 5 1/2 140 | | | | | 3 | 15/32 - 1 12 - 25 | 3/64 1.3 | 0.20 |
| **44 31 J22** | X | 7 180 | 45° | | | | 3 | 3/4 - 2 3/64 19 - 60 | 5/64 1.8 | 0.31 |
| **44 31 J32** | X | 9 225 | | | | | 3 | 1 37/64 - 3 15/16 40 - 100 | 3/32 2.3 | 0.43 |
| **44 31 J42** | X | 12 11/32 310 | | | | | 3 | 3 11/32 - 5 1/2 85 - 140 | 1/8 3.2 | 1.03 |



Circlip Pliers Sets can be found on pages 197, 199 and 200

# Circlip Pliers
for external circlips on shafts

46

- for fitting snap rings on shafts, ranging from 1/8" – 5 1/2" (3 – 140 mm) dia.
- solid style, forged
- non-slip, solid tips
- pliers body and tips: chrome vanadium steel; forged, oil-hardened






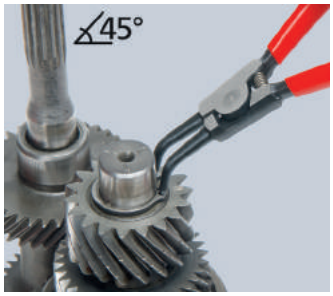







**46 11 A2**



**46 21 A21**

90°




**46 31 A22**

45°

**Style 1**
Straight tips

**Style 2**
90° angled tips

**Style 3**
45° angled tips

| Product Number | Packaging | ↔ Inch mm | | Pliers | Head | Handles | Style | Size of shaft Ø Inch Ø mm | Tips Ø Inch Ø mm | ⚖ lbs |
|---|---|---|---|---|---|---|---|---|---|---|
| **46 11 A0** | X | 5 1/2<br>140 | | black atramentized | polished | plastic coated | 1 | 1/8 - 25/64<br>3 - 10 | 1/32<br>0.9 | 0.19 |
| **46 11 A1** | X | 5 1/2<br>140 | | | | | 1 | 25/64 - 1<br>10 - 25 | 3/64<br>1.3 | 0.19 |
| **46 11 A2** | X | 7 1/4<br>180 | | | | | 1 | 3/4 - 2 3/64<br>19 - 60 | 5/64<br>1.8 | 0.30 |
| **46 11 A3** | X | 8 1/4<br>210 | | | | | 1 | 1 37/64 - 3 15/16<br>40 - 100 | 3/32<br>2.3 | 0.49 |
| **46 11 A4** | X | 12 1/2<br>320 | | | | | 1 | 3 11/32 - 5 1/2<br>85 - 140 | 1/8<br>3.2 | 1.11 |
| **46 21 A01** | X | 5<br>125 | | black atramentized | polished | plastic coated | 2 | 1/8 - 25/64<br>3 - 10 | 1/32<br>0.9 | 0.19 |
| **46 21 A11** | X | 5<br>125 | | | | | 2 | 25/64 - 1<br>10 - 25 | 3/64<br>1.3 | 0.19 |
| **46 21 A21** | X | 6 3/4<br>170 | 90° | | | | 2 | 3/4 - 2 3/64<br>19 - 60 | 5/64<br>1.8 | 0.29 |
| **46 21 A31** | X | 8<br>200 | | | | | 2 | 1 37/64 - 3 15/16<br>40 - 100 | 3/32<br>2.3 | 0.48 |
| **46 21 A41** | X | 12<br>300 | | | | | 2 | 3 11/32 - 5 1/2<br>85 - 140 | 1/8<br>3.2 | 1.12 |
| **46 31 A02** | X | 5 1/2<br>140 | | black atramentized | polished | plastic coated | 3 | 1/8 - 25/64<br>3 - 10 | 1/32<br>0.9 | 0.19 |
| **46 31 A12** | X | 5 1/2<br>140 | | | | | 3 | 25/64 - 1<br>10 - 25 | 3/64<br>1.3 | 0.19 |
| **46 31 A22** | X | 7 1/4<br>180 | 45° | | | | 3 | 3/4 - 2 3/64<br>19 - 60 | 5/64<br>1.8 | 0.30 |
| **46 31 A32** | X | 8 1/4<br>210 | | | | | 3 | 1 37/64 - 3 15/16<br>40 - 100 | 3/32<br>2.3 | 0.47 |
| **46 31 A42** | X | 12 11/32<br>310 | | | | | 3 | 3 11/32 - 5 1/2<br>85 - 140 | 1/8<br>3.2 | 1.13 |

Circlip Pliers Sets can be found on pages 197, 199 and 200

# Precision Circlip Pliers
for internal circlips in bore holes



With inserted tips for reliable work

Heavy-duty in continuous operation: up to 10 times longer service life than turned tips



- for fitting snap rings into bores, ranging from 5/16" to 5 1/2" (8 – 140 mm) dia.
- bolted joint: precise, zero-backlash operation of pliers
- pliers body: chrome vanadium electric steel; forged, oil-hardened
- inserted tips: spring steel wire, drawn

**Style 1**
Straight tips

**Style 2**
90° angled tips



**48 11 J2**



**48 21 J21**

## High Precision Quality

Easy and reliable assembly: form-fitting inserted and pressed-in tips made of high-density spring steel offer a high level of protection against excessive stress and strain, e.g. when removing stuck rings. The large supporting surfaces and the position of the tips make it more difficult for the rings to fly off.



**Precision and durability**

High-density spring steel with a score-free surface is used for the tips. This increases the tips' resistance to dynamic and static strain. The tips are 30% more stable than conventional pliers when subjected to one-off overloading while still allowing good accessibility during assembly. Subjected to dynamic strain, the tips' resistance capacity is up to 10 times greater! The tips on the precision circlip pliers are non-detachable!



Sturdy, inserted tips: made from high-density spring steel

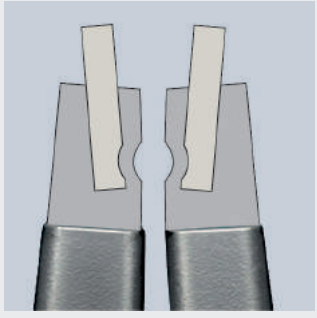

Tight fit through compression

| Product Number | Packaging | ↔ Inch mm | | Pliers | Handles | Style | Size of bore Ø Inch Ø mm | Tips Ø Inch Ø mm | ⚖ lbs |
|---|---|---|---|---|---|---|---|---|---|
| **48 11 J0** | X | 5 1/2 140 | | grey atramentized | non-slip plastic coated | 1 | 5/16 - 1/2 8 - 13 | 1/32 0.9 | 0.23 |
| **48 11 J1** | X | 5 1/2 140 | | | | 1 | 15/32 - 1 12 - 25 | 3/64 1.3 | 0.23 |
| **48 11 J2** | X | 7 1/4 180 | | | | 1 | 3/4 - 2 3/64 19 - 60 | 5/64 1.8 | 0.39 |
| **48 11 J3** | X | 9 225 | | | | 1 | 1 37/64 - 3 15/16 40 - 100 | 3/32 2.3 | 0.59 |
| **48 11 J4** | X | 12 1/2 320 | | | | 1 | 3 11/32 - 5 1/2 85 - 140 | 1/8 3.2 | 1.24 |
| **48 21 J01** | X | 5 1/8 130 | | grey atramentized | non-slip plastic coated | 2 | 5/16 - 1/2 8 - 13 | 1/32 0.9 | 0.23 |
| **48 21 J11** | X | 5 1/8 130 | | | | 2 | 15/32 - 1 12 - 25 | 3/64 1.3 | 0.23 |
| **48 21 J21** | X | 6 1/2 165 | 90° | | | 2 | 3/4 - 2 3/64 19 - 60 | 5/64 1.8 | 0.39 |
| **48 21 J31** | X | 8 1/4 210 | | | | 2 | 1 37/64 - 3 15/16 40 - 100 | 3/32 2.3 | 0.59 |
| **48 21 J41** | X | 12 305 | | | | 2 | 3 11/32 - 5 1/2 85 - 140 | 1/8 3.2 | 1.24 |



Precision Circlip Pliers Sets can be found on pages 197, 199 and 200

**NEW**

NOW with overstretching limiter

For all circlips with a diameter of 5/16" – 3 15/16"

> overexpansion limiter with screw stop prevents overexpansion of circlips

> adjustment using Allen Wrench

**Style 3**
Straight tips with overstretching limiter
(adjustable using end stop)

**Style 4**
90° angled tips with overstretching limiter
(adjustable using end stop)




**48 31 J2**




**48 41 J21**

**KNIPEX Precision Circlip Pliers with overexpansion guard**
For the standardized fitting of circlips in the industrial serial production. Particularly manufacturers of sensitive, safety-relevant components (e.g. brakes or gears) highly appreciate the compliance of DIN 471 and 472. The mounting of circlip rings in this case requires pliers with an overexpansion guard or a cone. KNIPEX Circlip Pliers with overexpansion guard meet the requirements and offer a superior durability.











| Product Number | Packaging | ↔ Inch mm | | Pliers | Handles | Style | Size of bore Ø Inch Ø mm | Tips Ø Inch Ø mm | ⚖ lbs |
|---|---|---|---|---|---|---|---|---|---|
| **48 31 J0** | | 5 1/2<br>140 | | grey atramentized | non-slip plastic coated | 3 | 5/16 - 1/2<br>8 - 13 | 1/32<br>0.9 | 0.23 |
| **48 31 J1** | | 5 1/2<br>140 | | | | 3 | 15/32 - 1<br>12 - 25 | 3/64<br>1.3 | 0.23 |
| **48 31 J2** | | 7 1/4<br>180 | | | | 3 | 3/4 - 2 3/64<br>19 - 60 | 5/64<br>1.8 | 0.39 |
| **48 31 J3** | | 9<br>225 | | | | 3 | 1 37/64 - 3 15/16<br>40 - 100 | 3/32<br>2.3 | 0.59 |
| **48 41 J01** | | 5 1/8<br>130 | | grey atramentized | non-slip plastic coated | 4 | 5/16 - 1/2<br>8 - 13 | 1/32<br>0.9 | 0.23 |
| **48 41 J11** | | 5 1/8<br>130 | | | | 4 | 15/32 - 1<br>12 - 25 | 3/64<br>1.3 | 0.23 |
| **48 41 J21** | | 6 1/2<br>165 | | | | 4 | 3/4 - 2 3/64<br>19 - 60 | 5/64<br>1.8 | 0.39 |
| **48 41 J31** | | 8 1/4<br>210 | | | | 4 | 1 37/64 - 3 15/16<br>40 - 100 | 3/32<br>2.3 | 0.59 |

# Precision Circlip Pliers
to assemble external circlips on shafts





## With inserted tips for reliable work

## Heavy-duty in continuous operation: up to 10 times longer service life compared to turned tips

- for fitting snap rings on shafts, ranging from 1/8" – 5 1/2" (3 – 140 mm) dia.
- large contact faces on the tips: no distortion of circlips, easy fitting
- bolted joint: precise, zero-backlash operation of pliers
- internal opening spring, protected and captive
- pliers body: chrome vanadium electric steel; forged, oil-hardened
- inserted tips: spring steel wire, drawn

**Style 1**
Straight tips

**Style 2**
90° angled tips



**49 11 A2**



**49 21 A21**

## High Precision Quality

Easy and reliable assembly: form-fitting inserted and pressed-in tips made of high-density spring steel offer a high level of protection against excessive stress and strain, e.g. when removing stuck rings. The large supporting surfaces and the position of the tips make it more difficult for the rings to fly off.



Spring inside the joint: the spring is protected inside the precision bolted joint. It does not hinder work and cannot get dirty or lost

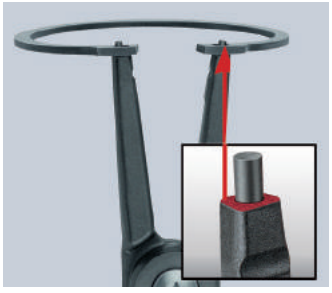

Circlips are held securely: large contact faces and the position of the tips make it difficult for the circlip to fly off

**Precision and durability**
High-density spring steel with a score-free surface is used for the tips. This increases the tips' resistance to dynamic and static strain. The tips are 30% more stable than conventional pliers when subjected to one-off overloading while still allowing good accessibility during assembly. Subjected to dynamic strain, the tips' resistance capacity is up to 10 times greater! The tips on the precision circlip pliers are non-detachable!



Sturdy, inserted tips: made from high-density spring steel

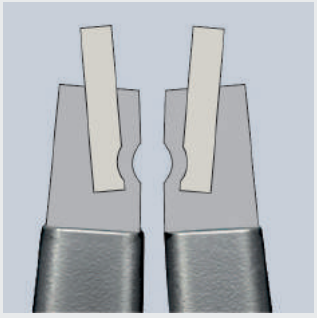

Tight fit through compression

| Product Number | Packaging | ↔ Inch mm | | Pliers | Handles | Style | Size of shaft Ø Inch Ø mm | Tips Ø Inch Ø mm | ⚖ lbs |
|---|---|---|---|---|---|---|---|---|---|
| **49 11 A0** | X | 5 1/2 140 | | grey atramentized | non-slip plastic coated | 1 | 1/8 - 25/64 3 - 10 | 1/32 0.9 | 0.22 |
| **49 11 A1** | X | 5 1/2 140 | | | | 1 | 25/64 - 1 10 - 25 | 3/64 1.3 | 0.22 |
| **49 11 A2** | X | 7 1/4 180 | | | | 1 | 3/4 - 2 3/64 19 - 60 | 5/64 1.8 | 0.38 |
| **49 11 A3** | X | 9 225 | | | | 1 | 1 37/64 - 3 15/16 40 - 100 | 3/32 2.3 | 0.60 |
| **49 11 A4** | X | 12 5/8 320 | | | | 1 | 3 11/32 - 5 1/2 85 - 140 | 1/8 3.2 | 1.32 |
| **49 21 A01** | X | 5 1/8 130 | | grey atramentized | non-slip plastic coated | 2 | 1/8 - 25/64 3 - 10 | 1/32 0.9 | 0.22 |
| **49 21 A11** | X | 5 1/8 130 | | | | 2 | 25/64 - 1 10 - 25 | 3/64 1.3 | 0.22 |
| **49 21 A21** | X | 6 1/2 165 | | | | 2 | 3/4 - 2 3/64 19 - 60 | 5/64 1.8 | 0.38 |
| **49 21 A31** | X | 8 1/4 210 | | | | 2 | 1 37/64 - 3 15/16 40 - 100 | 3/32 2.3 | 0.60 |
| **49 21 A41** | X | 12 305 | | | | 2 | 3 11/32 - 5 1/2 85 - 140 | 1/8 3.2 | 1.32 |



Precision Circlip Pliers Sets can be found on pages 197, 199 and 200

**NEW**

## NOW with overstretching limiter
## For all circlips with a diameter of 5/16" – 3 15/16"

- overexpansion limiter with screw stop prevents overexpansion of circlips
- adjustment using Allen Wrench

**Style 3**
Straight tips with overexpansion limiter (adjustable using end stop)

**Style 4**
90° angled tips with overexpansion limiter (adjustable using end stop)



Style 3 / style 4: with adjustable restricted opening




**49 31 A0**




**49 31 A2**

**KNIPEX Precision Circlip Pliers with overexpansion guard**
For the standardized fitting of circlips in the industrial serial production. Particularly manufacturers of sensitive, safety-relevant components (e.g. brakes or gears) highly appreciate the compliance of DIN 471 and 472. The mounting of circlip rings in this case requires pliers with an overexpansion guard or a cone. KNIPEX Circlip Pliers with overexpansion guard meet the requirements and offer a superior durability.

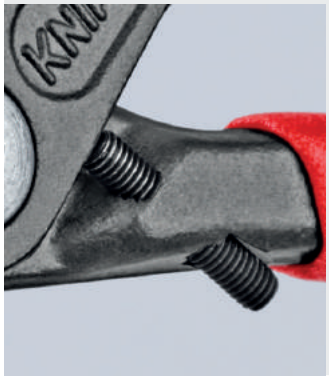






**49 41 A11**

| Product Number | Packaging | ↔ Inch mm | | Pliers | Handles | Style | Size of shaft Ø Inch Ø mm | Tips Ø Inch Ø mm | ⚖ lbs |
|---|---|---|---|---|---|---|---|---|---|
| **49 31 A0** | | 5 1/2<br>140 | | grey atramentized | non-slip plastic coated | 3 | 1/8 - 25/64<br>3 - 10 | 1/32<br>0.9 | 0.23 |
| **49 31 A1** | | 5 1/2<br>140 | | | | 3 | 25/64 - 1<br>10 - 25 | 3/64<br>1.3 | 0.22 |
| **49 31 A2** | | 7 1/4<br>180 | | | | 3 | 3/4 - 2 3/64<br>19 - 60 | 5/64<br>1.8 | 0.38 |
| **49 31 A3** | | 9<br>225 | | | | 3 | 1 37/64 - 3 15/16<br>40 - 100 | 3/32<br>2.3 | 0.60 |
| **49 41 A01** | | 5 1/8<br>130 | | grey atramentized | non-slip plastic coated | 4 | 1/8 - 25/64<br>3 - 10 | 1/32<br>0.9 | 0.23 |
| **49 41 A11** | | 5 1/8<br>130 | | | | 4 | 25/64 - 1<br>10 - 25 | 3/64<br>1.3 | 0.22 |
| **49 41 A21** | | 6 1/2<br>165 | | | | 4 | 3/4 - 2 3/64<br>19 - 60 | 5/64<br>1.8 | 0.38 |
| **49 41 A31** | | 8 1/4<br>210 | | | | 4 | 1 37/64 - 3 15/16<br>40 - 100 | 3/32<br>2.3 | 0.60 |

## Special Retaining Ring Pliers
for retaining rings on shafts
DIN ISO 5743

45



- for fitting horseshoe-shaped spring retaining rings and circlips without grip holes
- for shaft retaining devices
- with opening spring
- chrome vanadium electric steel; forged, oil-hardened



**45 10 170**





**45 21 200**



**45 10 170**
For retaining rings with a minimum ring split gap of 9/64" (3.6 mm)

**45 21 200**
Angled jaws with centering hole; for snap rings larger than 15/32" (12.0 mm) dia., e. g. for securing drive shaft in the gearbox of a motor vehicle; minimum ring split gap of the rings 3/32" (2.2 mm)



45 10 170



45 21 200

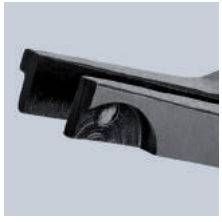

45 21 200

| Product Number | Packaging | ↔ Inch mm | | Pliers | Handles | ⚖ lbs |
|---|---|---|---|---|---|---|
| **45 10 170** | | 6 3/4<br>170 | | burnished | burnished | 0.34 |
| **45 21 200** | | 8<br>200 | 30° | burnished | plastic coated | 0.41 |

## Circlip Pliers
for grip rings on shafts
DIN ISO 5743

46



- for fitting grip rings on shafts ranging from 1/16" – 1 3/16" (1.5 – 30 mm) dia.
- includes opening spring for easy repetitive work
- solid style, forged
- non-slip, solid tips
- pliers body and tips: chrome vanadium steel; forged, oil-hardened

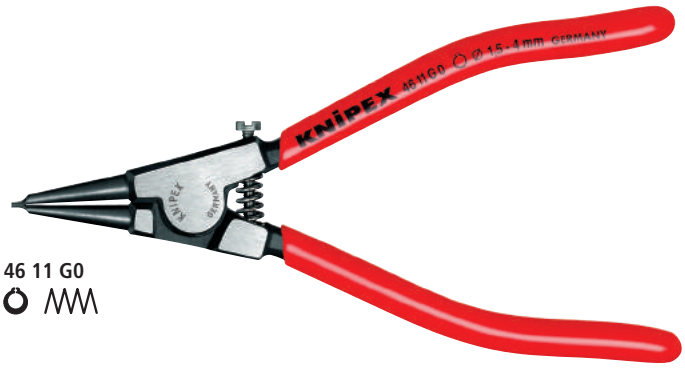


**46 11 G0**



**46 11 G0**
Adjustable stop screw to prevent overstretching, for rings from 1/16" - 1 5/32" (1.5 - 4.0 mm) dia.

| Product Number | Packaging | ↔ Inch mm | | Pliers | Head | Handles | Size of shaft Ø Inch Ø mm | Tips Ø Inch Ø mm | ⚖ lbs |
|---|---|---|---|---|---|---|---|---|---|
| **46 11 G0** | | 5 1/2<br>140 | | black atramentized | polished | non-slip plastic coated | 1/16 - 5/32<br>1.5 - 4.0 | 1/32<br>0.9 | 0.19 |
| **46 11 G1** | | 5 1/2<br>140 | | black atramentized | polished | non-slip plastic coated | 5/32 - 9/32<br>4.0 - 7.0 | 3/64<br>1.3 | 0.19 |
| **46 11 G2** | | 5 1/2<br>140 | | | | | 13/64 - 1/2<br>5.0 - 13.0 | 5/64<br>1.8 | 0.19 |
| **46 11 G3** | | 5 1/2<br>140 | | | | | 35/64 - 45/64<br>14.0 - 18.0 | 3/32<br>2.3 | 0.19 |
| **46 11 G4** | | 7 1/4<br>180 | | | | | 25/32 - 1 3/16<br>20.0 - 30.0 | 1/8<br>3.2 | 0.30 |

# Circlip Tool
for internal and external circlips

46

- universal usage for large circlips with nominal diameters of 16" – 39 3/8" (400 – 1000 mm)
- reliable opening and closing of the circlips and holding by self-locking precision spindle drive
- for fitting and removing circlips in one operation
- circlips are securely held due to short, direct attachment
- replaceable tips with 15/64" (6 mm) and 23/64" (9 mm) diameters, for perfect adaption to the actuation bores in the circlips
- optional operation with hexagonal key, ratchet wrench or cordless screwdriver
- areas of application e.g. wind turbines, tidal power stations, generator construction, hydropower stations, large machine construction (rolling mills, presses), shipbuilding, aerospace – wherever very high forces and torques are transmitted with large shafts and bearings
- tip material: chrome vanadium electric steel



**46 10 100**

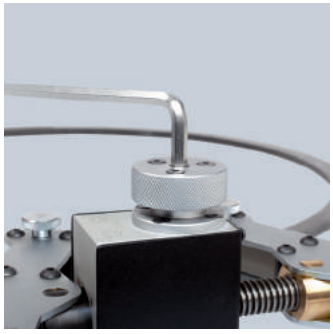

Manually operable



Machine operable

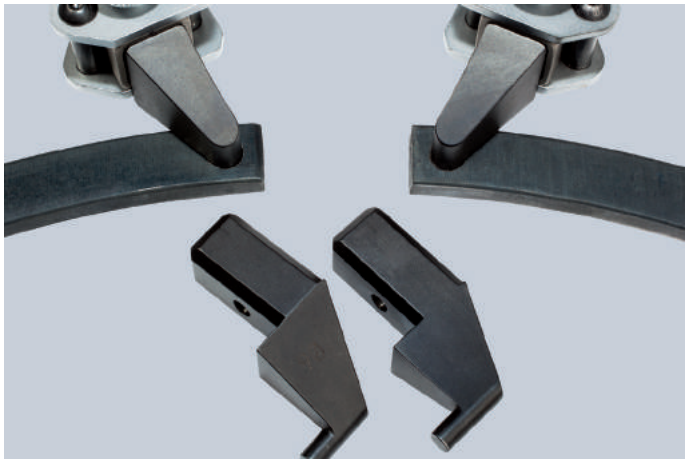

Replaceable inserts for internal and external circlips



| Product Number | Packaging | | Size of bore Ø Inch Ø mm | Size of shaft Ø Inch Ø mm | lbs |
|---|---|---|---|---|---|
| **46 10 100** | Plastic case with foam insert | | 16 - 39 3/8 400 - 1000 | 16 - 39 3/8 400 - 1000 | 4.75 |

# Carpenters' Pincers
DIN ISO 9243

50

- heavy-duty
- preferred by tradespeople
- wear-resistant
- cutting edge hardness (approx. 60 HRC)
- special tool steel; forged, oil-hardened







**50 00 210**




**50 01 225**

| Product Number | Packaging | ↔ Inch mm | | Pliers | Head | Handles | Cutting capacities ◑ Ø Inch Ø mm | ⚖ lbs |
|---|---|---|---|---|---|---|---|---|
| **50 00 160** | | 6 1/4 160 | | black atramentized | polished | black atramentized | 5/64 1.8 | 0.49 |
| **50 00 180** | | 7 180 | | | | | 5/64 2.0 | 0.70 |
| **50 00 210** | | 8 1/4 210 | | | | | 3/32 2.2 | 0.94 |
| **50 00 250** | | 10 250 | | | | | 3/32 2.2 | 1.27 |
| **50 00 300** | | 12 300 | | | | | 3/32 2.4 | 1.87 |
| **50 01 160** | | 6 1/4 160 | | black atramentized | polished | plastic coated | 5/64 1.8 | 0.53 |
| **50 01 180** | | 7 1/4 180 | | | | | 5/64 2.0 | 0.73 |
| **50 01 210** | | 8 1/4 210 | | | | | 3/32 2.2 | 0.98 |
| **50 01 225** | | 9 225 | | | | | 3/32 2.2 | 1.34 |
| **50 01 250** | | 10 250 | | | | | 3/32 2.2 | 1.29 |
| **50 01 300** | | 12 300 | | | | | 3/32 2.4 | 1.99 |

## Carpenters' Pincers
DIN ISO 9243

51

- with striking face for driving in nails
- cutting edge hardness (approx. 60 HRC)
- special tool steel; forged, multi stage oil-hardened







**51 01 210**

| Product Number | Packaging | ↔ Inch mm | | Pliers | Head | Handles | ⚖ lbs |
|---|---|---|---|---|---|---|---|
| **51 01 210** | | 8 1/4 210 | | black atramentized | polished | plastic coated | 1.00 |

## Farriers' Pincers
Break-off Pliers for vehicle bodywork
DIN ISO 5743

55

- the ideal pliers for the farrier
- with small head and reversing groove
- suitable for dismantling work in vehicle body workshops
- cutting edge hardness (approx. 59 HRC)
- special tool steel; forged, multi stage oil-hardened








**55 00 300**

| Product Number | Packaging | ↔ Inch mm | | Pliers | Head | Head width Inch mm | ⚖ lbs |
|---|---|---|---|---|---|---|---|
| **55 00 300** | | 12 300 | | black atramentized | polished | 25/32 20.0 | 1.73 |

# Concreters' Nippers

(tower pincers, steel fixers' nippers)
DIN ISO 9242

99
0

- to twist and cut wire in one operation: fast, reliable and economical
- precision and long service life make these the most widely purchased concreters´ nippers in the world
- induction hardened cutting edges, cutting edge hardness (approx. 61 HRC)
- high-grade special tool steel; forged, multi stage oil-hardened

**99 00 220 K12**
With 15/32" (12 mm) head, particularly suitable for tile paving work











**99 00 200**



**99 00 280**



**99 00 300**



**99 00 220 K12**



**99 01 220**

| Product Number | Packaging | ↔ Inch mm | | Pliers | Head | Handles | Cutting capacities ◑ Ø Inch Ø mm | Cutting capacities ◕ Ø Inch Ø mm | ⚖ lbs |
|---|---|---|---|---|---|---|---|---|---|
| **99 00 200** | | 8 200 | | black atramentized | polished | | 5/64 1.8 | 1/16 1.4 | 0.51 |
| **99 00 220** | | 8 3/4 220 | | | | | 3/32 2.4 | 1/16 1.6 | 0.69 |
| **99 00 220 K12** | | 8 3/4 220 | | black atramentized | polished | | 3/32 2.4 | 1/16 1.6 | 0.69 |
| **99 00 250** | X | 10 250 | | black atramentized | polished | | 3/32 2.4 | 1/16 1.6 | 0.88 |
| **99 00 280** | | 11 280 | | | | | 7/64 2.8 | 5/64 1.8 | 1.00 |
| **99 00 300** | | 12 300 | | | | | 1/8 3.1 | 5/64 1.8 | 1.12 |
| **99 01 200** | X | 8 200 | | black atramentized | polished | plastic coated | 5/64 1.8 | 1/16 1.4 | 0.55 |
| **99 01 220** | X | 8 3/4 220 | | | | | 3/32 2.4 | 1/16 1.6 | 0.74 |
| **99 01 250** | X | 10 250 | | | | | 3/32 2.4 | 1/16 1.6 | 0.95 |
| **99 01 280** | | 11 280 | | | | | 7/64 2.8 | 5/64 1.8 | 1.10 |
| **99 01 300** | | 12 300 | | | | | 1/8 3.1 | 5/64 1.8 | 1.21 |

# High Leverage Concreters' Nippers

with high lever transmission

DIN ISO 9242

99
1

25% less effort required compared to conventional concreters' nippers of the same size

Extra-slim form for tying deep mounted steel rods

- for use when working with concrete steel and binding wire
- twists and cuts wire in one operation
- high leverage joint minimizes strain when working with thick binding wires
- high leverage design reduces strain on tendons and muscles
- cutting edge hardness (approx. 61 HRC)
- high-grade special tool steel; forged, multi stage oil-hardened



**99 10 250**



**99 10 300**



**99 11 300**



**99 14 250**



**99 14 300**





| Product Number | Packaging | ↔ Inch mm | | Pliers | Head | Handles | Cutting capacities ◑ Ø Inch Ø mm | Cutting capacities ◕ Ø Inch Ø mm | Head width Inch mm | ⚖ lbs |
|---|---|---|---|---|---|---|---|---|---|---|
| **99 10 250** | | 10 250 | | black atramentized | polished | - | 1/8 3.3 | 5/64 1.8 | 1 25.0 | 0.77 |
| **99 10 300** | X | 12 300 | | | | | 5/32 3.8 | 5/64 2.0 | 1 25.0 | 1.11 |
| **99 11 250** | | 10 250 | | black atramentized | polished | plastic coated | 1/8 3.3 | 5/64 1.8 | 1 25.0 | 0.77 |
| **99 11 300** | | 12 300 | | | | | 5/32 3.8 | 5/64 2.0 | 1 25.0 | 1.18 |
| **99 14 250** | | 10 250 | | bright zinc plated | - | - | 1/8 3.3 | 5/64 1.8 | 1 25.0 | 0.77 |
| **99 14 300** | | 12 300 | | | | | 5/32 3.8 | 5/64 2.0 | 1 25.0 | 1.10 |

# Bolt End Cutting Nippers
high lever transmission
DIN ISO 5743

61

## Powerful, compact, comfortable

- features a greater cutting capacity and requires less effort than conventional end cutting nippers
- cuts nails, small bolts and all wires including piano wire
- exceptional cutting capacity due to high leverage joint
- cutting edge hardness (approx. 64 HRC)
- vanadium steel; forged, multi stage oil-hardened

**61 02 200**
Slim two-color multi-component sleeves for better handling and easier transport; large contact surface on the handles for better allotment of pressure and more comfort at work




**61 01 200**
5°




**61 02 200**
5°



High cutting performance: also for piano wire



Perfect for working with fencing



Almost flush cutting of bolts, nails, etc.

| Product Number | Packaging | ↔ Inch mm | | Pliers | Head | Handles | Cutting capacities ◔ Ø Inch Ø mm | ◑ Ø Inch Ø mm | ◕ Ø Inch Ø mm | ● Ø Inch Ø mm | ⚖ lbs |
|---|---|---|---|---|---|---|---|---|---|---|---|
| **61 01 200** | X | 8 200 | 5° | black atramentized | polished | plastic coated | 3/64 - 15/64 1.0 - 6.0 | 5/32 4.0 | 9/64 3.5 | 1/8 3.0 | 0.96 |
| **61 02 200** | | 8 200 | 5° | black atramentized | polished | slim multi-component grips | 3/64 - 15/64 1.0 - 6.0 | 5/32 4.0 | 9/64 3.5 | 1/8 3.0 | 1.03 |

# High Leverage End Cutting Nippers
DIN ISO 5748

67




- cutting edges for soft, hard and piano wire
- high cutting capacity with minimal effort due to optimum coordination of cutting edge angle and transmission ratio
- cutting edge hardness (approx. 64 HRC)
- chrome vanadium heavy-duty steel; forged, multi stage oil-hardened




**67 01 200**

| Product Number | Packaging | ↔ Inch mm | | Pliers | Head | Handles | Cutting capacities ◔ Ø Inch Ø mm | ◑ Ø Inch Ø mm | ◕ Ø Inch Ø mm | ● Ø Inch Ø mm | ⚖ lbs |
|---|---|---|---|---|---|---|---|---|---|---|---|
| **67 01 140** | | 5 1/2 140 | | black atramentized | polished | plastic coated | 5/32 4.0 | 1/8 3.1 | 5/64 2.0 | 1/16 1.5 | 0.34 |
| **67 01 160** | | 6 1/4 160 | | | | | 11/64 4.5 | 9/16 3.4 | 3/32 2.5 | 5/64 2.0 | 0.52 |
| **67 01 200** | X | 8 200 | | | | | 13/64 5.0 | 5/32 3.8 | 1/8 3.0 | 3/32 2.5 | 0.70 |

# End Cutting Nippers

68

Head shape provides optimized movement when tightening steel mesh knots during reinforced concrete work

- cutting edges for soft and hard wire
- also suitable for twisting and cutting binding wire
- cutting edges are induction hardened; cutting edge hardness (approx. 61 HRC)
- high-grade special tool steel; forged, multi stage oil-hardened



68 01 180





68 01 280

| Product Number | Packaging | ↔ Inch mm | | Pliers | Head | Handles | Cutting capacities ◔ Ø Inch Ø mm | ◑ Ø Inch Ø mm | ◕ Ø Inch Ø mm | ⚖ lbs |
|---|---|---|---|---|---|---|---|---|---|---|
| **68 01 160** | | 6 1/4 160 | | black atramentized | polished | plastic coated | 5/32 4.0 | 7/64 2.8 | 3/32 2.3 | 0.45 |
| **68 01 180** | | 7 1/4 180 | | | | | 5/32 4.0 | 1/8 3.2 | 3/32 2.5 | 0.66 |
| **68 01 200** | X | 8 200 | | | | | 5/32 4.0 | 9/64 3.5 | 7/64 2.8 | 0.74 |
| **68 01 280** | X | 11 280 | | | | | 11/64 4.5 | 5/32 4.0 | 1/8 3.2 | 1.03 |

# End Cutting Nippers

for mechanics

DIN ISO 5748

69

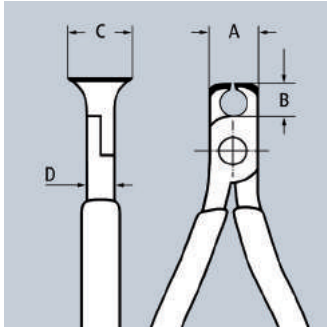


- cutting edges for soft, hard and piano wire; also suitable for thin copper wires
- lap joint
- cutting edge hardness (approx. 64 HRC)
- chrome vanadium heavy-duty steel; forged, multi stage oil-hardened




69 01 130

| Product Number | Packaging | ↔ Inch mm | | Pliers | Head | Handles | Cutting capacities ◔ Ø Inch Ø mm | ◑ Ø Inch Ø mm | ◕ Ø Inch Ø mm | ● Ø Inch Ø mm | Dimensions A Inch mm | B Inch mm | D Inch mm | C Inch mm | ⚖ lbs |
|---|---|---|---|---|---|---|---|---|---|---|---|---|---|---|---|
| **69 01 130** | | 5 1/8 130 | | black atramentized | polished | plastic coated | 1/64 - 5/64 0.4 - 2.0 | 3/64 1.3 | 3/64 1.0 | 1/32 0.8 | 5/8 16 | 19/64 7.5 | 25/64 10 | 25/32 20 | 0.25 |
| **69 03 130** | | 5 1/8 130 | | chrome plated | chrome | plastic coated | 1/64 - 5/64 0.4 - 2.0 | 3/64 1.3 | 3/64 1.0 | 1/32 0.8 | 5/8 16 | 19/64 7.5 | 25/64 10 | 25/32 20 | 0.25 |

# CoBolt®

## Exceptional cutting performance

- induction hardened edges cut soft, hard and piano wire
- cuts material like bolts, nails, rivets, etc. up to 1/4" (6.0 mm) dia.
- exceptional cutting performance with minimum effort because of new lever action design
- cutting edge hardness (approx. 64 HRC)
- chrome vanadium heavy-duty steel; forged, multi stage oil-hardened

**60 % less effort required**

compared to conventional high leverage diagonal cutters.
The lever-action mechanism ensures an extremely favorable lever ratio with very little friction. The cutting force is about 20 times higher than the handforce applied.

### Micro-structured cutting edges allow easy cutting of large cross-sections

### Gripping surface below the joint for gripping and pulling wires with a diameter from 3/64" (1 mm)

**71 12 200**
Opening spring and locking device are integrated in the handles for comfortable work and protected transport

**71 02 200 T BKA***
Pliers with tether attachment point for tool drop protection system



Micro-structured cutting edges allow easy cutting of large cross-sections



With gripping surface below the joint for gripping and pulling wires with a diameter from 3/64"



Opening spring and locking device are integrated in the handles for comfortable work and protected transport



71 01 160: High cutting force with a length of just 6 1/4" – ideal for small hands




**71 01 160**




**71 01 200**




**71 02 200**




**71 12 200**

| Product Number | Packaging | ↔ Inch mm | | Pliers | Handles | Cutting capacities ◔ Ø Inch Ø mm | ◑ Ø Inch Ø mm | ◕ Ø Inch Ø mm | ● Ø Inch Ø mm | ⚖ lbs |
|---|---|---|---|---|---|---|---|---|---|---|
| **71 01 160** | X | 6 1/4 160 | | black atramentized | plastic coated | 13/64 5.3 | 11/64 4.4 | 1/8 3.2 | 1/8 3.0 | 0.43 |
| **71 01 200** | X | 8 200 | | black atramentized | plastic coated | 1/4 6.0 | 13/64 5.2 | 5/32 4.0 | 9/64 3.6 | 0.74 |
| **71 02 200** | X | 8 200 | | black atramentized | slim multi-component grips | 1/4 6.0 | 13/64 5.2 | 5/32 4.0 | 9/64 3.6 | 0.81 |
| **71 02 200 T BKA** | X | 8 200 | | black atramentized | slim multi-component grips, integrated tether attachment point | 1/4 6.0 | 13/64 5.2 | 5/32 4.0 | 9/64 3.6 | 0.83 |
| **71 12 200** | X | 8 200 | | black atramentized | slim multi-component grips | 1/4 6.0 | 13/64 5.2 | 5/32 4.0 | 9/64 3.6 | 0.84 |



*Learn more about our tethered tool system on pages 207-211

## The recess in the blade allows easier cutting of thicker wires, e.g. for anchor bolts in false ceilings

## Gripping surface below the joint for gripping and pulling wires with a diameter from 3/64" (1 mm)

**71 32 200 / 71 32 200 T BKA***
Opening spring and locking device are integrated in the handles for comfortable work and protected transport

**71 32 200 T BKA***
Pliers with tether attachment point for tool drop protection system




**71 31 200**









| Product Number | Packaging | ↔ Inch mm | | Pliers | Handles | Cutting capacities Ø Inch Ø mm | Ø Inch Ø mm | Ø Inch Ø mm | Ø Inch Ø mm | lbs |
|---|---|---|---|---|---|---|---|---|---|---|
| **71 31 200** | X | 8 200 | | black atramentized | plastic coated | 1/4 6.0 | 13/64 5.2 | 5/32 4.0 | 9/64 3.6 | 0.73 |
| **71 32 200** | | 8 200 | | black atramentized | slim multi-component grips | 1/4 6.0 | 13/64 5.2 | 5/32 4.0 | 9/64 3.6 | 0.82 |
| **71 32 200 T BKA** | X | 8 200 | | black atramentized | slim multi-component grips, integrated tether attachment point | 1/4 6.0 | 13/64 5.2 | 5/32 4.0 | 9/64 3.6 | 0.84 |

## 20° angled head with single-sided joint bar and diagonal cutting edge for flush cutting; with space for gripping

**71 22 200 / 71 22 200 T BKA***
Opening spring and locking device are integrated in the handles for comfortable work and protected transport

**71 22 200 T BKA***
Pliers with tether attachment point for tool drop protection system

**71 41 200**
The recess in the blade allows easier cutting of thicker wires, e.g. for anchor bolts in false ceilings







**71 22 200**
∡20°

| Product Number | Packaging | ↔ Inch mm | | Pliers | Handles | Cutting capacities Ø Inch Ø mm | Ø Inch Ø mm | Ø Inch Ø mm | Ø Inch Ø mm | lbs |
|---|---|---|---|---|---|---|---|---|---|---|
| **71 21 200** | X | 8 200 | ∡20° | black atramentized | plastic coated | 1/4 6.0 | 13/64 5.2 | 5/32 4.0 | 9/64 3.6 | 0.73 |
| **71 22 200** | X | 8 200 | ∡20° | black atramentized | slim multi-component grips | 1/4 6.0 | 13/64 5.2 | 5/32 4.0 | 9/64 3.6 | 0.82 |
| **71 22 200 T BKA** | X | 8 200 | ∡20° | black atramentized | slim multi-component grips, integrated tether attachment point | 1/4 6.0 | 13/64 5.2 | 5/32 4.0 | 9/64 3.6 | 0.83 |
| **71 41 200** | X | 8 200 | ∡20° | black atramentized | plastic coated | 1/4 6.0 | 13/64 5.2 | 5/32 4.0 | 9/64 3.6 | 0.73 |

## KNIPEX CoBolt® XL
Compact Bolt Cutter

71

**The compact bolt cutters from KNIPEX are now available with longer handles for one and two-handed operation.**

Up to a 40-fold increase of manual force

For powerful cutting of larger diameters as well as very hard materials

Two-handed operation for maximum cutting force

- 60% less effort required compared to high leverage diagonal cutters of the same size
- 40-fold increase of manual force due to special joint design
- gripping surface below the joint for gripping and pulling wires with a diameter from 3/64" (1 mm)
- induction hardened precision blades: cutting edge hardness (approx. 64 HRC)
- chrome vanadium heavy-duty steel; forged, multi stage oil-hardened





**71 01 250**

**71 01 250**
Straight blades



**71 31 250**

**71 31 250**
Blades with notch for easier cutting of larger diameters due to a better leverage close to the fulcrum

| Product Number | Packaging | ↔ Inch mm | | Pliers | Handles | Cutting capacities ◑ Ø Inch Ø mm | ◕ Ø Inch Ø mm | ● Ø Inch Ø mm | ⚖ lbs |
|---|---|---|---|---|---|---|---|---|---|
| **71 01 250** | X | 10 250 | | black atramentized | plastic coated | 7/32 5.6 | 5/32 4.0 | 5/32 3.8 | 1.03 |
| **71 31 250** | X | 10 250 | | black atramentized | plastic coated | 1/4 6.0 | 11/64 4.3 | 11/64 4.2 | 1.03 |

## KNIPEX CoBolt® "Fencing"
Compact Bolt Cutter

71

- the CoBolt® with reduced cutting edge hardness to allow more pressure on the sides of the cutting edges (e.g. for making fences)
- with precision cutting edges for soft and hard wire
- cutting capacity: max. Ø5/32" for hard wire (up to 1900 n/mm² / 48 HRC)
- cuts material like bolts, nails, rivets, etc. up to 13/64" (5.2 mm) dia.
- exceptional cutting performance with minimum effort because of new lever action design
- induction hardened cutting edges (approx. 62 HRC)
- chrome vanadium heavy-duty steel; forged, oil-hardened



**71 01 200 R**

**71 01 200 R**
The recess in the blade allows easier cutting of thicker wires, e.g. for false ceilings

| Product Number | Packaging | ↔ Inch mm | | Pliers | Handles | Cutting capacities ◔ Ø Inch Ø mm | ◑ Ø Inch Ø mm | ◕ Ø Inch Ø mm | ⚖ lbs |
|---|---|---|---|---|---|---|---|---|---|
| **71 01 200 R** | X | 8 200 | | black atramentized | plastic coated | 15/64 6.0 | 13/64 5.2 | 5/32 4.0 | 0.74 |
| **71 31 200 R** | X | 8 200 | | black atramentized | plastic coated | 15/64 6.0 | 13/64 5.2 | 5/32 4.0 | 0.74 |

# Bolt Cutters



- cutting capacity of steel up to 48 HRC
- robust cutting edges with a hardness of (approx. 62 HRC)
- forged-on stopper with comfortable shock absorber
- good access due to very flat construction of head and joint area
- ergonomically angled handles to minimize effort
- sturdy, two-color dual component handles won't slip
- precise adjustment (12 positions) by cam bolt
- high cutting performance with minimum effort due to optimum coordination of the cutting edge angle and transmission ratio
- bolted cutter head, replaceable
- blade: chrome vanadium heavy-duty steel; forged, multi stage oil-hardened
- joint: special tool steel; forged
- handle: steel tube, powder-coated












Forged-on stopper with absorbing inserts: cushions the cutting stroke

| Product Number | Packaging | ↔ Inch mm | | Head | Handles | Cutting capacities 19 HRC Ø Inch Ø mm | 40 HRC Ø Inch Ø mm | 48 HRC Ø Inch Ø mm | lbs |
|---|---|---|---|---|---|---|---|---|---|
| **71 72 460** | | 18 1/4 460 | | grey atramentized | multi-component grips | 5 /16 8 | 15/64 6 | 13/64 5 | 4.59 |
| **71 72 610** | | 24 610 | | grey atramentized | multi-component grips | 23/64 9 | 5 /16 8 | 9/32 7 | 5.57 |
| **71 72 760** | | 30 760 | | grey atramentized | multi-component grips | 7/16 11 | 23/64 9 | 5 /16 8 | 9.40 |
| **71 72 910** | | 35 3/4 910 | | grey atramentized | multi-component grips | 1/2 13 | 25/64 10 | 23/64 9 | 10.91 |

| | |
|---|---|
| **71 79 460** | Spare cutter head for 71 72 460 complete with screws |
| **71 79 610** | Spare cutter head for 71 72 610 complete with screws |
| **71 79 760** | Spare cutter head for 71 72 760 complete with screws |
| **71 79 910** | Spare cutter head for 71 72 910 complete with screws |

# Concrete Mesh Cutter

71
82

## The special shape of the mesh cutter head, 71 82 950, enable it to cut structural steel that is lying down flat

- cutting capacity of steel up to 48 HRC hardness
- robust cutting edges are induction hardened, cutting edge hardness (approx. 62 HRC)
- forged-in stopper with comfortable shock-absorber
- good access due to very flat construction of head and joint area
- ergonomically angled handles to minimize effort
- sturdy non-slip two-color dual component handle sleeves
- precise adjustment (12 positions) by eccentric bolt
- high cutting performance with minimum effort due to optimum coordination of the cutting edge angle and transmission ratio
- bolted cutter head, replaceable
- blade: chrome vanadium heavy-duty steel; forged, multi stage oil-hardened
- joint: special tool steel, forged
- handle: steel tube, powder-coated





**71 82 950**





| Product Number | Packaging | ↔ Inch mm | | Head | Handles | Cutting capacities 19 HRC Ø Inch Ø mm | 40 HRC Ø Inch Ø mm | 48 HRC Ø Inch Ø mm | ⚖ lbs |
|---|---|---|---|---|---|---|---|---|---|
| **71 82 950** | | 41 13/32 950 | | grey atramentized | multi-component grips | 7/16 11 | 23/64 9 | 15/64 6 | 8.95 |
| **71 89 950** | Spare cutter head for 71 82 950 complete with screws | | | | | | | | |

# Diagonal Cutters
DIN ISO 5749

70

> the essential cutting tool for all-around use
> high-quality material and precise workmanship for long service life
> precision cutting edges for soft and hard wire
> clean cutting of thin copper wires, even at the cutting edge tips
> induction hardened cutting edges (approx. 62 HRC)
> narrow head style for use in confined areas
> vanadium steel; forged, multi stage oil-hardened

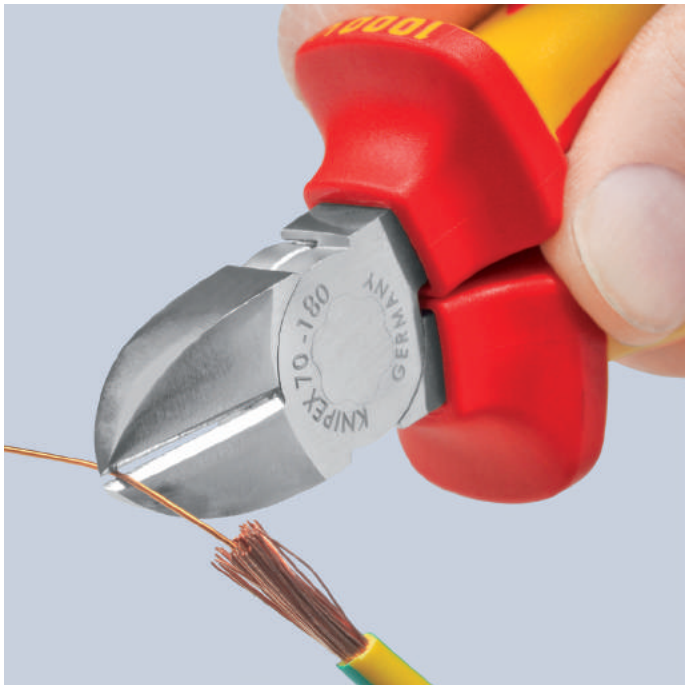

Clean cutting of thin copper wires, also at the cutting edge tips


**70 01 180**



**70 02 180**



**70 08 180 SBA**
1000 V ASTM



**70 11 110**

| Product Number | Packaging | ↔ Inch mm | | Pliers | Head | Handles | Cutting capacities ◔ Ø Inch Ø mm | ◑ Ø Inch Ø mm | ◕ Ø Inch Ø mm | ⚖ lbs |
|---|---|---|---|---|---|---|---|---|---|---|
| **70 01 110** | | 4 1/4 110 | | black atramentized | polished3 | plastic coated | 1/8 3.0 | 5/64 2.0 | 3/64 1.2 | 0.18 |
| **70 01 125** | | 5 125 | | | | | 1/8 3.0 | 3/32 2.3 | 1/16 1.5 | 0.18 |
| **70 01 140** | | 5 1/2 140 | | | | | 5/32 4.0 | 3/32 2.5 | 5/64 1.8 | 0.28 |
| **70 01 180** | | 7 1/4 180 | | | | | 5/32 4.0 | 1/8 3.0 | 3/32 2.5 | 0.44 |
| **70 02 125** | | 5 125 | | black atramentized | polished | multi-component grips | 1/8 3.0 | 3/32 2.3 | 1/16 1.5 | 0.26 |
| **70 02 140** | | 5 1/2 140 | | | | | 5/32 4.0 | 3/32 2.5 | 5/64 1.8 | 0.35 |
| **70 02 180** | | 7 1/4 180 | | | | | 5/32 4.0 | 1/8 3.0 | 3/32 2.5 | 0.57 |
| **70 08 180 SBA** | X | 7 1/4 180 | 1000 V ASTM | black atramentized | polished | insulated, multi-component handles, ASTM-tested | 5/32 4.0 | 1/8 3.0 | 3/32 2.5 | 0.58 |
| **70 11 110** | | 4 1/4 110 | | black atramentized | polished | plastic coated | 1/8 3.0 | 5/64 2.0 | 3/64 1.2 | 0.20 |

# Diagonal Cutters
DIN ISO 5749

70

## The next generation of the KNIPEX classic, with even better features

20% higher cutting force than the previous model, plus longer cutting edges

High cutting force due to optimum cutting geometry and transmission ratio

- strong precision rivet for even movement and long service life
- induction hardened cutting edges (approx. 62 HRC)
- narrow head with long cutting edges: good access in confined areas
- long tool life and high loading capacity
- the essential diagonal cutters for diverse use
- vanadium steel; forged, multi stage oil-hardened in multiple steps



**70 01 160**




**70 02 160**




**70 08 160**
1000 V ASTM

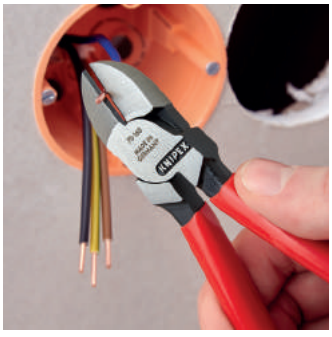
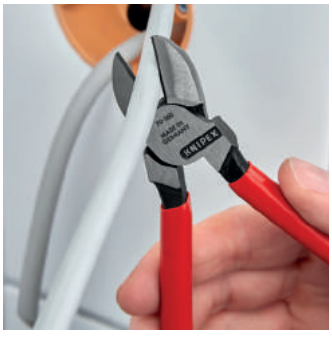

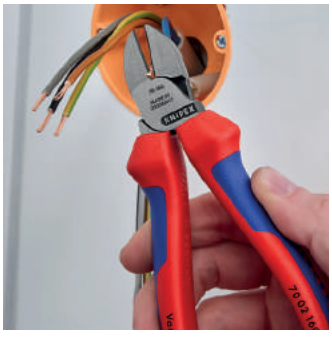
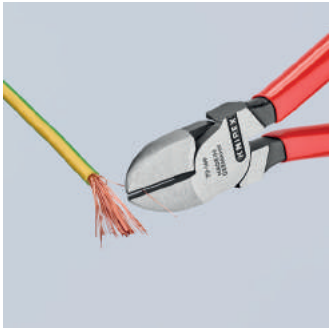




| Product Number | Packaging | ↔ Inch mm | | Pliers | Head | Handles | Cutting capacities ◔ Ø Inch Ø mm | ◑ Ø Inch Ø mm | ◕ Ø Inch Ø mm | ⚖ lbs |
|---|---|---|---|---|---|---|---|---|---|---|
| **70 01 160** | X | 6 1/4 160 | | black atramentized | polished | plastic coated | 5/32 4.0 | 1/8 3.0 | 5/64 2.0 | 0.40 |
| **70 02 160** | | 6 1/4 160 | | black atramentized | polished | multi-component grips | 5/32 4.0 | 1/8 3.0 | 5/64 2.0 | 0.47 |
| **70 08 160 SBA** | X | 6 1/4 160 | 1000 V ASTM | black atramentized | polished | insulated, multi-component handles, ASTM-tested | 5/32 4.0 | 1/8 3.2 | 5/64 2.0 | 0.49 |
| **70 26 160** | | 6 1/4 160 | 1000 V | chrome plated | chrome plated | insulated multi-component grips, VDE-tested | 5/32 4.0 | 1/8 3.0 | 5/64 2.0 | 0.51 |

# Flush Cutting Diagonal Pliers for Plastics

DIN ISO 5743

72

- provides a fully flush cut when cutting tie-wraps, plastic and soft metals
- for nearly flush cutting of molded plastic components from sprues
- includes opening spring for easy repetitive work
- vanadium electric steel; forged, oil-hardened

**72 01 160**
With elongated cutting edges; improved transmission ratio for 25% better cutting performance










**72 01 160**




**72 02 125**



**72 11 160**
45°



**72 21 160**
85°

| Product Number | Packaging | ↔ Inch mm | | Head | Handles | ⚖ lbs |
|---|---|---|---|---|---|---|
| **72 01 140** | | 5 1/2 140 | | | | 0.28 |
| **72 01 160** | X | 6 1/4 160 | | polished | plastic coated | 0.39 |
| **72 01 180** | | 7 1/4 180 | | | | 0.43 |
| **72 02 125** | | 5 125 | | polished | multi-component grips | 0.24 |
| **72 11 160** | X | 6 1/4 160 | 45° | polished | plastic coated | 0.38 |
| **72 21 160** | | 6 1/4 160 | 85° | polished | plastic coated | 0.39 |

# Diagonal Cutter for fiber optics

DIN ISO 5743

72
51

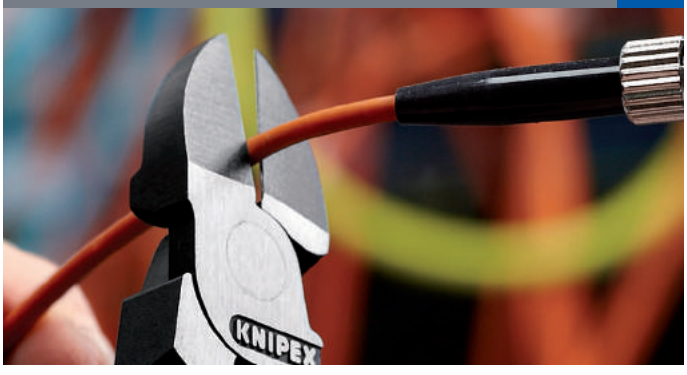


- specially developed for cutting fiber optics (glass fiber cables)
- with elongated cutting edges
- cutting edges induction hardened
- includes opening spring for easy repetitive work
- vanadium steel; forged, multi stage oil-hardened




**72 51 160**

| Product Number | Packaging | ↔ Inch mm | | Head | Handles | ⚖ lbs |
|---|---|---|---|---|---|---|
| **72 51 160** | | 6 1/4 160 | | polished | plastic coated | 0.38 |

# High Leverage Flush Cutter for soft metal and plastic

72

## For easy flush cutting of plastic components and soft metal

- > less effort for cutting thicker workpieces due to high leverage design
- > space for hands and flush cutting due to 20° angled head with joint bar on one side
- > opening spring and locking device are integrated in the handles
- > precision cutting edges, induction hardened (approx. 59 HRC) for soft materials
- > chrome vanadium electric steel, forged, multi stage oil-hardened







View: Back of pliers

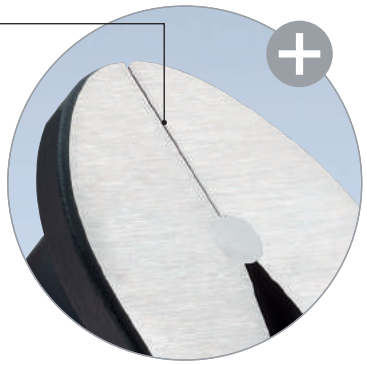

Materials are cut flush due to the almost bevel-free precision cutting edge

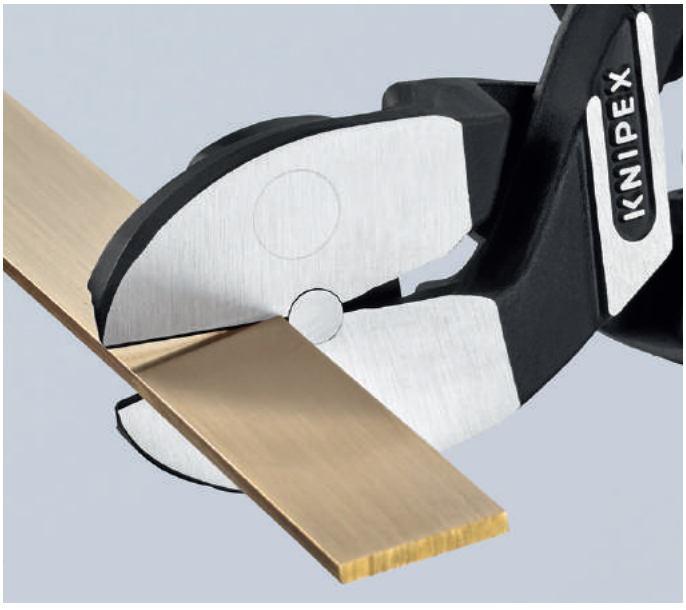


Copper busbars are cut cleanly and flush




Ideal for the flush cutting of plastic sprues with large diameters

| Product Number | Packaging | ↔ Inch mm | | Pliers | Handles | ◔ Ø Inch Ø mm | ⚖ lbs |
|---|---|---|---|---|---|---|---|
| **72 62 200** | X | 8 200 | ∡20° MM | black atramentized | with slim multi-component grips | 1/4 6.0 | 0.83 |


KNIPEX

# KNIPEX X-Cut®

Compact Diagonal Cutters, high lever transmission
DIN ISO 5749



## Powerful, light and universal

## Cuts fine strands as well as multi-stranded cables and piano wires

- box-joint design: high stability and lightweight
- high cutting performance with minimum effort due to optimum coordination of the cutting edge angle and transmission ratio
- large opening width for thicker cables
- cuts all wires precisely, even fine copper wires
- compact, low weight construction
- double supported joint axis for heavy-duty work
- universal usage in the assembly, maintenance and production
- chrome vanadium heavy-duty steel; forged, multi stage oil-hardened





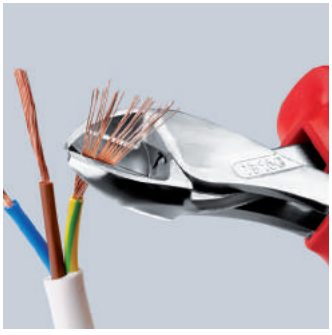





Box-joint design: high stability and lightweight




**73 02 160**




**73 06 160**
1000 V

X-Cut®

**40 % less effort required**

compared with standard diagonal cutters of the same length.
With double mounted hinged joint.

| Product Number | Packaging | ↔ Inch mm | | Pliers | Head | Handles | Cutting capacities Ø Inch Ø mm | Ø Inch Ø mm | Ø Inch Ø mm | Ø Inch Ø mm | Ø Inch Ø mm | lbs |
|---|---|---|---|---|---|---|---|---|---|---|---|---|
| **73 02 160** | X | 6 1/4 160 | | black atramentized | polished | multi-component grips | 3/16 4.8 | 5/32 3.8 | 7/64 2.7 | 3/32 2.2 | 15/32 12.0 | 0.39 |
| **73 06 160** | | 6 1/4 160 | 1000 V | chrome plated | chrome plated | insulated, multi-component grips, VDE-tested | 3/16 4.8 | 5/32 3.8 | 7/64 2.7 | 3/32 2.2 | 15/32 12.0 | 0.41 |

# KNIPEX TwinForce®

High Leverage Diagonal Cutter
DIN ISO 5749

73

## Superior high leverage diagonal cutter with patented double joint

- ideal transmission of force due to double-hinged design
- reliably cuts all types of wire, including steel tape
- for rough or very fine cutting
- for comfortable cutting, repetitive cutting or extremely hard cutting jobs
- high degree of stability and zero backlash due to precisely milled forged-in axle
- chrome vanadium heavy-duty steel; forged, oil-hardened




**73 71 180**




**73 72 180**







## NEW for diagonal cutters:

The option to reapply the tool. The KNIPEX TwinForce® cuts even 5/32" (4 mm) thick wire without great effort when reapplied two or three times. Conventional high leverage diagonal cutters either cannot cut these diameters or only with very great effort.

## Extremely easy cutting with little strain:

cuts 50% easier than KNIPEX high leverage diagonal cutters of the same size

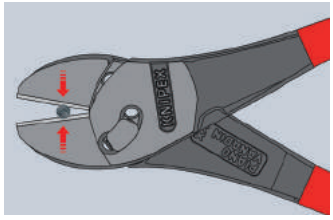


Insert the wires as close to the hinge as possible. In case of cutters with very high transmission, the width of the gap between the cutting edges close to the fulcrum may be less than the thickness of the wire. Wires may slip forward when the cutting starts.

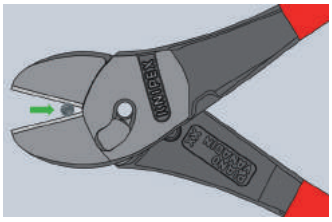


Continue cutting in the same location along the wire. Now cutting is much easier because the wire remains in place closer to the fulcrum.

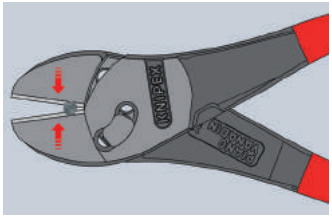


First make a notch in the wire using the KNIPEX TwinForce® until the required hand force increases considerably. Now open the pliers and slide the wire backwards towards the joint.

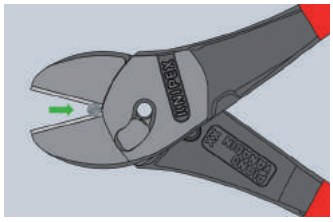


You can repeat this process if necessary.

TwinForce®

| Product Number | Packaging | ↔ Inch mm | | Pliers | Head | Handles | Cutting capacities ◔ Ø Inch Ø mm | ◑ Ø Inch Ø mm | ◕ Ø Inch Ø mm | ● Ø Inch Ø mm | ⚖ lbs |
|---|---|---|---|---|---|---|---|---|---|---|---|
| **73 71 180** | X | 7 1/4 180 | | black atramentized | polished | plastic coated | 7/32 5.5 | 3/16 4.6 | 1/8 3.2 | 1/8 3.0 | 0.56 |
| **73 72 180 BK** | X | 7 1/4 180 | | black atramentized | polished | multi-component grips | 7/32 5.5 | 3/16 4.6 | 1/8 3.2 | 1/8 3.0 | 0.62 |

# High Leverage Diagonal Cutters
DIN ISO 5749

74

- forged-on axle for heavy-duty work
- for very tough, continuous use
- high cutting performance with minimum effort due to optimum coordination of the cutting edge angle and transmission ratio
- precision cutting edges induction hardened (approx. 64 HRC) cut several types of wire including piano wire
- chrome vanadium heavy-duty steel; forged, multi stage oil-hardened

**Style 1**
With opening spring; can be activated if required

**Style 2**
Angled head offers clearance for gripping

**10" Length (250 mm)**
Suitable for copper conductors up to 16 mm² and aluminum conductors up to 35 mm²

**74 02 200 T BKA / 74 02 250 T BKA / 74 22 200 T BKA / 74 22 250 T BKA***
Pliers with integrated tether attachment point for tool drop protection system

## 20% less effort required

compared to conventional diagonal cutters of the same length. With forged-on joint axle.



74 12: Opening spring in deactivated position



74 12: Activated opening spring by pressing down with your thumb










**74 01 200**




**74 02 250**




**74 02 250 T BKA**




**74 08 200 US**
1000 V ASTM




**74 12 180**




**74 21 200**
12°



With integrated forged joint axle
for very tough, continuous use

| Product Number | Packaging | ↔ Inch mm | | Pliers | Head | Handles | Style | Cutting capacities ◑ Ø Inch Ø mm | ◕ Ø Inch Ø mm | ● Ø Inch Ø mm | ⚖ lbs |
|---|---|---|---|---|---|---|---|---|---|---|---|
| **74 01 140** | | 5 1/2 140 | | black atramentized | polished | plastic coated | - | 1/8 3.1 | 5/64 2.0 | 1/16 1.5 | 0.29 |
| **74 01 160** | X | 6 1/4 160 | | | | | - | 9/64 3.4 | 3/32 2.5 | 5/64 2.0 | 0.42 |
| **74 01 180** | X | 7 1/4 180 | | | | | - | 5/32 3.8 | 7/64 2.7 | 3/32 2.2 | 0.53 |
| **74 01 200** | X | 8 200 | | | | | - | 11/64 4.2 | 1/8 3.0 | 3/32 2.5 | 0.58 |
| **74 01 250** | X | 10 250 | | | | | - | 3/16 4.6 | 9/64 3.5 | 1/8 3.0 | 0.90 |
| **74 02 140** | | 5 1/2 140 | | black atramentized | polished | multi-component grips | - | 1/8 3.1 | 5/64 2.0 | 1/16 1.5 | 0.35 |
| **74 02 160** | | 6 1/4 160 | | | | | - | 9/64 3.4 | 3/32 2.5 | 5/64 2.0 | 0.49 |
| **74 02 180** | | 7 1/4 180 | | | | | - | 5/32 3.8 | 7/64 2.7 | 3/32 2.2 | 0.60 |
| **74 02 200** | X | 8 200 | | | | | - | 11/64 4.2 | 1/8 3.0 | 3/32 2.5 | 0.66 |
| **74 02 200 T BKA** | X | 8 200 | | black atramentized | polished | multi-component grips, integrated tether attachment point | - | 11/64 4.2 | 1/8 3.0 | 3/32 2.5 | 0.67 |
| **74 02 250** | X | 10 250 | | black atramentized | polished | multi-component grips | - | 3/16 4.6 | 9/64 3.5 | 1/8 3.0 | 1.00 |
| **74 02 250 T BKA** | X | 10 250 | | black atramentized | polished | multi-component grips, integrated tether attachment point | - | 3/16 4.6 | 9/64 3.5 | 1/8 3.0 | 1.01 |
| **74 08 200 US** | X | 8 200 | 1000 V ASTM | black atramentized | polished | insulated, multi-component handles, ASTM-tested | - | 11/64 4.2 | 1/8 3.0 | 3/32 2.5 | 0.68 |
| **74 08 250 US** | X | 10 250 | | | | | - | 3/16 4.6 | 9/64 3.5 | 1/8 3.0 | 1.04 |
| **74 12 160** | | 6 1/4 160 | | black atramentized | polished | multi-component grips | 1 | 9/64 3.4 | 3/32 2.5 | 5/64 2.0 | 0.48 |
| **74 12 180** | | 7 1/4 180 | | | | | 1 | 5/32 3.8 | 7/64 2.7 | 3/32 2.2 | 0.60 |
| **74 21 180** | | 7 1/4 180 | | black atramentized | polished | plastic coated | 2 | 5/32 3.8 | 7/64 2.7 | 3/32 2.2 | 0.52 |
| **74 21 200** | X | 8 200 | 12° | | | | 2 | 11/64 4.2 | 1/8 3.0 | 3/32 2.5 | 0.59 |
| **74 21 250** | X | 10 250 | | | | | 2 | 3/16 4.6 | 9/64 3.5 | 1/8 3.0 | 0.89 |
| **74 22 200** | X | 8 200 | 12° | black atramentized | polished | multi-component grips | 2 | 11/64 4.2 | 1/8 3.0 | 3/32 2.5 | 0.67 |
| **74 22 200 T BKA** | X | 8 200 | 12° | black atramentized | polished | multi-component grips, integrated tether attachment point | 2 | 11/64 4.2 | 1/8 3.0 | 3/32 2.5 | 0.68 |
| **74 22 250** | X | 10 250 | 12° | black atramentized | polished | multi-component grips | 2 | 3/16 4.6 | 9/64 3.5 | 1/8 3.0 | 1.00 |
| **74 22 250 T BKA** | X | 10 250 | 12° | black atramentized | polished | multi-component grips, integrated tether attachment point | 2 | 3/16 4.6 | 9/64 3.5 | 1/8 3.0 | 1.01 |

*Learn more about our tethered tool system on pages 207-211

## High Leverage Center Cutters
DIN ISO 5743

74
91





Cutting edges in the center of the cutter head

- forged-on axle for heavy-duty cutting
- precision cutting edges for soft, hard and piano wire
- cuts thick wires with less effort than other diagonal cutters of the same length
- cutting edges are in the center of the cutter head
- high cutting performance with minimum effort due to optimum coordination of the cutting edge angle and transmission ratio
- cutting edge hardness (approx. 64 HRC)
- chrome vanadium heavy-duty steel; forged, multi stage oil-hardened



**74 91 250**

| Product Number | Packaging | ↔ Inch mm | | Pliers | Head | Handles | Cutting capacities Ø Inch Ø mm | Ø Inch Ø mm | Ø Inch Ø mm | Ø Inch Ø mm | lbs |
|---|---|---|---|---|---|---|---|---|---|---|---|
| **74 91 250** | X | 10 250 | | black atramentized | polished | plastic coated | 13/64 5.0 | 13/64 5.0 | 5/32 3.8 | 9/64 3.5 | 0.87 |

## Diagonal Cutters
for electromechanics
DIN ISO 5749

76

- with sharp, precisely aligned cutting edges for soft, hard wire and piano wire
- cutting edge hardness (approx. 63 HRC)
- lap joint
- vanadium steel; forged, multi stage oil-hardened in multiple steps

**76 12 125**
Low-friction double spring for gentle and even opening

**76 22 125**
Without bevel for flush cutting of soft wires;
low-friction double spring for gentle and even opening

**76 81 125**
Particularly tapered head with small bevel for work in confined areas (cable harnesses, multi-stranded wires)

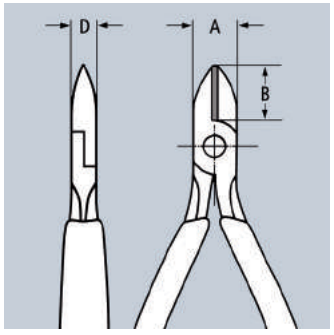




**76 01 125**




**76 12 125**



**76 22 125**



**76 81 125**

| Product Number | Packaging | ↔ Inch mm | | Pliers | Head | Handles | Cutting capacities Ø Inch Ø mm | Ø Inch Ø mm | Ø Inch Ø mm | Ø Inch Ø mm | Dimensions A Inch mm | B Inch mm | D Inch mm | lbs |
|---|---|---|---|---|---|---|---|---|---|---|---|---|---|---|
| **76 01 125** | | 5 125 | | black atramentized | polished | plastic coated | 1/64 - 1/8 0.4 - 3.0 | 3/32 2.3 | 1/16 1.5 | 1/32 0.6 | 37/64 14.5 | 5/8 16.0 | 23/64 9.0 | 0.20 |
| **76 12 125** | | 5 125 | | black atramentized | polished | multi-component grips | 1/64 - 3/32 0.4 - 2.5 | 5/64 1.8 | 3/64 1.0 | 1/32 0.6 | 37/64 14.5 | 5/8 16.0 | 23/64 9.0 | 0.25 |
| **76 22 125** | | 5 125 | | black atramentized | polished | multi-component grips | 1/64 - 3/32 0.4 - 2.5 | - | - | - | 37/64 14.5 | 5/8 16.0 | 23/64 9.0 | 0.24 |
| **76 81 125** | | 5 125 | | black atramentized | polished | plastic coated | 1/64 - 1/16 0.4 - 1.7 | 3/64 1.3 | 1/32 0.8 | - | 37/64 14.5 | 5/8 16.0 | 23/64 9.0 | 0.19 |

# Electronics Oblique Cutting Nippers
DIN ISO 9654

**62 12**

- cutting edges for soft and medium hard wire
- without bevel; for flush cutting
- cutting edge hardness (approx. 60 HRC)
- low-friction double spring for gentle and even opening
- precision box-joint
- the polish and a fine film of oil offers effective rust protection – no circuit faults caused by peeling chrome from plated tools
- ball bearing steel




**62 12 120**

| Product Number | Packaging | ↔ Inch mm | | Head | Handles | Cutting capacities ◔ Ø Inch Ø mm | Cutting capacities ◑ Ø Inch Ø mm | Dimensions A Inch mm | Dimensions B Inch mm | Dimensions D Inch mm | Dimensions C Inch mm | ⚖ lbs |
|---|---|---|---|---|---|---|---|---|---|---|---|---|
| **62 12 120** | | 4 3/4<br>120 | ❄ ∡15° | polished | multi-component grips | 1/64 - 3/64<br>0.3 - 1.0 | 1/32<br>0.7 | 7/16<br>11 | 25/64<br>10 | 19/64<br>7.5 | 43/64<br>17 | 0.21 |



# Electronics End Cutting Nippers
DIN ISO 9654

64

- precision pliers for ultra fine cutting work, e.g. in electronics and fine mechanics
- precision box-joint
- low-friction double spring for gentle and even opening
- the mirror polish and fine film of oil offers effective rust protection – no circuit faults caused by peeling chrome from plated tools
- cutting edge hardness (at least 60 HRC)
- ball bearing steel, laser-hardened cutting edges

**Style 0**
End Cutter, with bevel

**Style 2**
End Cutter, mini-blade with small bevel

**Style 3**
Oblique End Cutter, short head, with small bevel, 15° angle

**Style 4**
Oblique End Cutter, short head, with small bevel, 27° angle

**Style 5**
Oblique End Cutter, short head, without bevel, for flush cutting, 27° angle

**Style 6**
Oblique End Cutter, mini-blade with small bevel, 65° angle, made of special tool steel, forged, oil-hardened

**Style 7**
Oblique End Cutter, mini-blade with small bevel, head with recess, 35° angle, made of special tool steel, forged, oil-hardened

**Style 1 / 64 11 115**
End Cutter, without bevel




**64 02 115**
90°




**64 12 115**
90°




**64 22 115**
90°




**64 32 120**
15°




**64 72 120**
35°

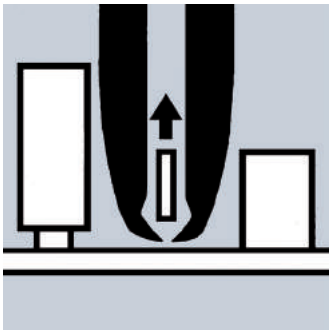

64 22 115

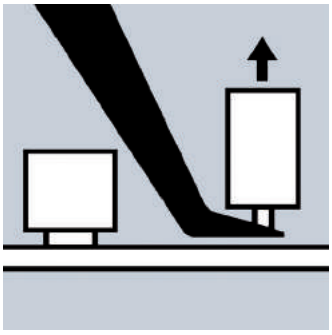

64 62 120

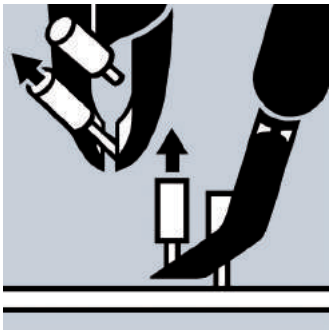

64 72 120

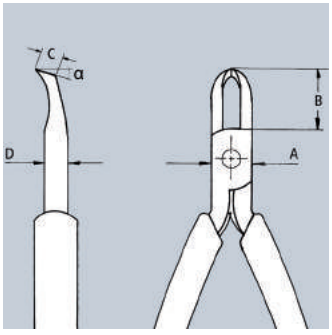


64 72 120



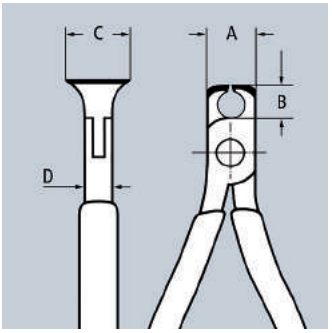


64 01/02/11/12

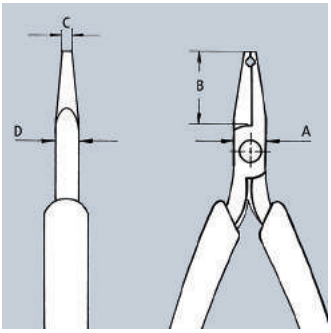


64 22 115

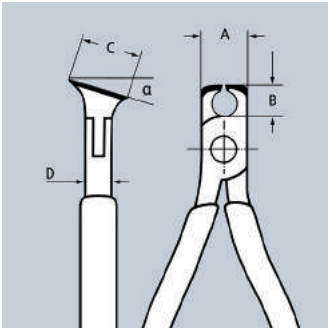


64 32/42/52

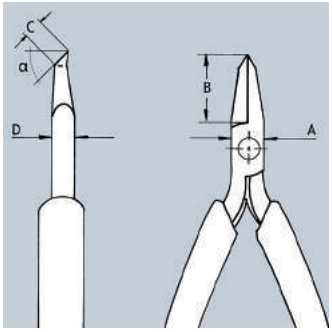


64 62 120




**64 42 115**




**64 52 115**




**64 62 120**

| Product Number | Packaging | ↔ Inch / mm | | Head | Handles | Style | Cutting capacities ◔ Ø Inch / Ø mm | ◑ Ø Inch / Ø mm | ◕ Ø Inch / Ø mm | Dimensions A Inch / mm | B Inch / mm | C Inch / mm | D Inch / mm | ⚖ lbs |
|---|---|---|---|---|---|---|---|---|---|---|---|---|---|---|
| **64 01 115** | | 4 1/2<br>115 | ∠90° | mirror polished | plastic coated | 0 | 5/64<br>2.0 | 3/64<br>1.0 | 1/64<br>0.5 | 7/16<br>11.0 | 15/64<br>6.0 | 5/8<br>16.0 | 19/64<br>7.5 | 0.17 |
| **64 02 115** | | 4 1/2<br>115 | ∠90° | mirror polished | multi-component grips | 0 | 5/64<br>2.0 | 3/64<br>1.0 | 1/64<br>0.5 | 7/16<br>11.0 | 15/64<br>6.0 | 5/8<br>16.0 | 19/64<br>7.5 | 0.21 |
| **64 11 115** | | 4 1/2<br>115 | ∠90° | mirror polished | plastic coated | 1 | 1/16<br>1.4 | 1/32<br>0.8 | - | 7/16<br>11.0 | 15/64<br>6.0 | 5/8<br>16.0 | 9/32<br>7.0 | 0.16 |
| **64 12 115** | | 4 1/2<br>115 | ∠90° | mirror polished | multi-component grips | 1 | 1/16<br>1.4 | 1/32<br>0.8 | - | 7/16<br>11.0 | 15/64<br>6.0 | 5/8<br>16.0 | 9/32<br>7.0 | 0.21 |
| **64 22 115** | | 4 1/2<br>115 | ∠90° | mirror polished | multi-component grips | 2 | 1/32<br>0.8 | - | - | 25/64<br>10.0 | 51/64<br>20.2 | 1/8<br>3.0 | 15/64<br>6.0 | 0.14 |
| **64 32 120** | | 4 3/4<br>120 | ∠15° | mirror polished | multi-component grips | 3 | 1/16<br>1.5 | 3/64<br>1.0 | 1/64<br>0.5 | 7/16<br>11.0 | 25/64<br>10.0 | 43/64<br>17.0 | 9/32<br>7.0 | 0.20 |
| **64 42 115** | | 4 1/2<br>115 | ∠27° | mirror polished | multi-component grips | 4 | 1/16<br>1.5 | 3/64<br>1.0 | 1/64<br>0.5 | 13/32<br>10.5 | 25/64<br>10.0 | 15/32<br>12.0 | 9/32<br>7.0 | 0.15 |
| **64 52 115** | | 4 1/2<br>115 | ∠27° | mirror polished | multi-component grips | 5 | 3/64<br>1.3 | - | - | 13/32<br>10.5 | 25/64<br>10.0 | 15/32<br>12.0 | 9/32<br>7.0 | 0.15 |
| **64 62 120** | | 4 3/4<br>120 | ∠65° | mirror polished | multi-component grips | 6 | 1/64<br>0.5 | - | - | 3/8<br>9.5 | 47/64<br>18.5 | 13/64<br>5.0 | 15/64<br>6.0 | 0.15 |
| **64 72 120** | | 4 3/4<br>120 | ∠35° | mirror polished | multi-component grips | 7 | 1/16<br>1.5 | - | - | 15/32<br>12.0 | 13/64<br>5.1 | 13/64<br>5.0 | 9/32<br>7.0 | 0.21 |

# Electronics End Cutting Nippers ESD
DIN ISO 9654

64

- precision pliers for ultra fine cutting work, e.g. in electronics and fine mechanics
- electrically discharging handles – dissipative
- precision box-joint
- low-friction double spring for gentle and even opening
- the mirror polish and a fine film of oil offers effective rust protection – no circuit faults caused by peeling chrome from plated tools
- cutting edge hardness (at least 60 HRC)
- with two-color dual component handles, black/grey
- ball bearing chrome steel

**Style 1**
End Cutter, with small bevel

**Style 3**
Oblique End Cutter, short head, with small bevel, 15° angle

**Style 6**
Oblique End Cutter, mini-blade with small bevel, 65° angle




**64 12 115 ESD**




**64 32 120 ESD**




**64 62 120 ESD**

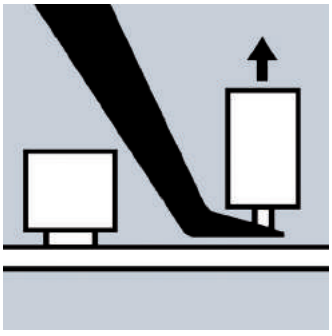

64 62 120 ESD

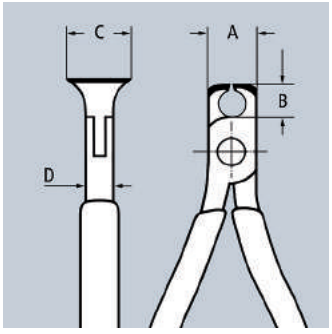


64 12 115 ESD

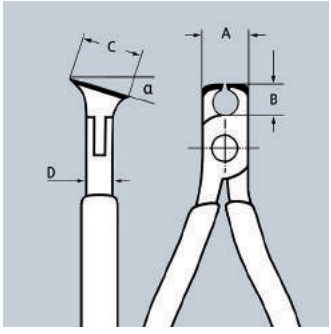


64 32 120 ESD

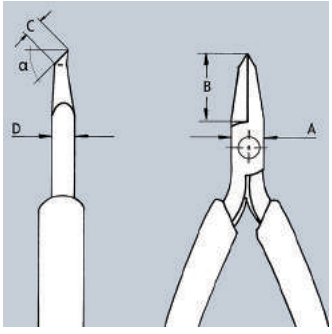


64 62 120 ESD

**ESD Pliers (electrostatic discharge)**

Electrostatic energy is discharged through the handles in a gradual and controlled manner which protects components endangered by electrostatic discharge in accordance with applicable standards, e.g. IEC TR 61 340-5, DIN EN 61 340-5, SP Method 2472

| Product Number | Packaging | ↔ Inch mm | | Head | Handles | Style | Cutting capacities Ø Inch Ø mm | Ø Inch Ø mm | Ø Inch Ø mm | Dimensions A Inch mm | B Inch mm | C Inch mm | D Inch mm | lbs |
|---|---|---|---|---|---|---|---|---|---|---|---|---|---|---|
| **64 02 115 ESD** | | 4 1/2 115 | 90° | mirror polished | ESD multi-component grips | 0 | 5/64 2.0 | 3/64 1.0 | 1/64 0.5 | 7/16 11.0 | 15/64 6.0 | 5/8 16.0 | 19/64 7.5 | 0.21 |
| **64 12 115 ESD** | | 4 1/2 115 | 90° | mirror polished | ESD multi-component grips | 1 | 1/16 1.5 | 3/64 1.0 | 1/64 0.5 | 7/16 11.0 | 15/64 6.0 | 5/8 16.0 | 9/32 7.0 | 0.21 |
| **64 32 120 ESD** | | 4 3/4 120 | 15° | mirror polished | ESD multi-component grips | 3 | 1/16 1.5 | 3/64 1.0 | 1/64 0.5 | 7/16 11.0 | 25/64 10.0 | 43/64 17.0 | 9/32 7.0 | 0.20 |
| **64 62 120 ESD** | | 4 3/4 120 | 65° | mirror polished | ESD multi-component grips | 6 | 1/64 0.5 | - | - | 3/8 9.5 | 47/64 18.5 | 13/64 5.0 | 15/64 6.0 | 0.15 |

# Electronics Diagonal Cutters
DIN ISO 9654

75

> bolted joint for high precision and stress tolerance
> for ultra fine cutting work, e.g. in electronics and fine mechanics
> sharp, ground cutting edges for soft, hard wire and piano wire
> cutting edge hardness (approx. 64 HRC)
> low-friction double spring for gentle and even opening
> high-grade special tool steel; forged, multi stage oil-hardened

**Style 0**
With bevel

**Style 1**
With bevel and lead catcher, no uncontrolled loss of cut wire ends

**Style 2**
With small bevel

**Style 3**
Particularly narrow head, with bevel



Bolted joint

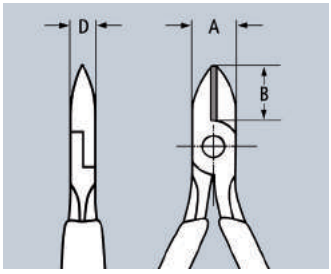





75 02 125



75 12 125



75 22 125

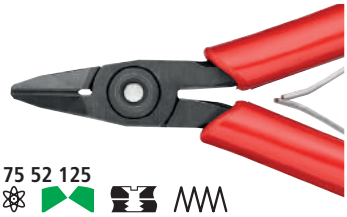

75 52 125

**WARNING:** This product can expose you to chemicals including Diisononyl Phthalate, which is known to the State of California to cause cancer. For more information go to

| Product Number | Packaging | ↔ Inch mm | | Style | Pliers | Handles | Cutting capacities ◔ Ø Inch Ø mm | ◑ Ø Inch Ø mm | ◕ Ø Inch Ø mm | ● Ø Inch Ø mm | Dimensions A Inch mm | B Inch mm | D Inch mm | ⚖ lbs |
|---|---|---|---|---|---|---|---|---|---|---|---|---|---|---|
| **75 02 125** | | 5 125 | | 0 | burnished | plastic grips | 1/64 - 3/64 0.2 - 1.3 | 3/64 1.0 | 1/32 0.6 | 1/64 0.4 | 13/32 10.5 | 35/64 14 | 1/4 6.5 | 0.18 |
| **75 12 125** | | 5 125 | | 1 | burnished | plastic grips | 1/64 - 3/64 0.2 - 1.3 | 3/64 1.0 | 1/32 0.6 | 1/64 0.4 | 13/32 10.5 | 35/64 14 | 1/4 6.5 | 0.18 |
| **75 22 125** | | 5 125 | | 2 | burnished | plastic grips | 1/64 - 3/64 0.2 - 1.3 | 1/32 0.9 | 1/64 0.4 | 1/64 0.3 | 13/32 10.5 | 35/64 14 | 1/4 6.5 | 0.18 |
| **75 52 125** | | 5 125 | | 3 | burnished | plastic grips | 1/64 - 1/32 0.2 - 0.8 | 1/64 0.5 | 1/64 0.3 | - | 13/32 10.5 | 35/64 14 | 1/4 6.5 | 0.18 |

# Electronics Diagonal Cutters
DIN ISO 9654

77

- for fine cutting work in electronics and fine mechanics
- sturdy, zero backlash box-joint
- low-friction double spring for gentle and even opening
- mirror polish, with a fine film of oil, offers effective rust protection – no circuit faults caused by peeling chrome from plated tools
- cutting edges induction hardened (approx. 60 HRC)
- ball bearing steel

**77 01 115 / 77 02 130 / 77 01 130**
Round head, with bevel; cutting edge hardness approx. 62 HRC

**77 02 115 / 77 22 130**
Round head, with small bevel; cutting edge hardness approx. 60 HRC

**77 12 115**
Round head, with bevel and lead catcher – no uncontrolled loss of cut wire ends; cutting edge hardness approx. 62 HRC

**77 21 115**
Pointed head, without bevel; cutting edge hardness approx. 57 HRC

**77 22 115**
Round head, without bevel; cutting edge hardness approx. 57 HRC

**77 32 115**
Pointed head, with small bevel; cutting edge hardness approx. 60 HRC

**77 42 115 / 77 42 130**
Pointed head, without bevel; cutting edge hardness approx. 57 HRC

**77 52 115**
Pointed, flat head, with small bevel; cutting edge hardness approx. 60 HRC

**77 72 115**
Pointed mini-head, with small bevel; cutting edge hardness approx. 60 HRC



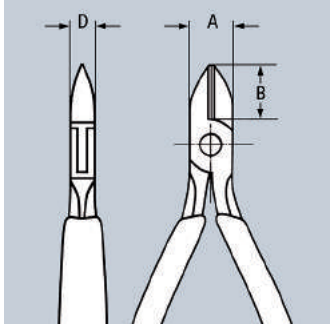





**77 01 115**




**77 02 115**




**77 12 115**

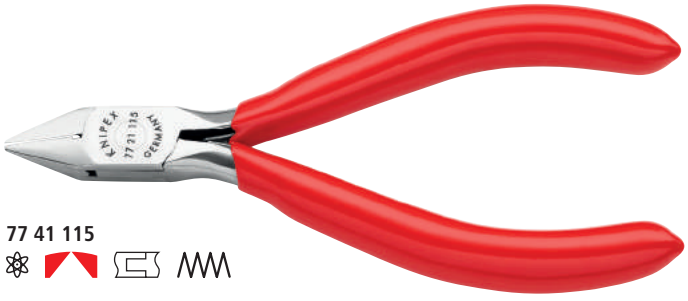

**77 41 115**




**77 22 115**




**77 32 115**




**77 52 115**




**77 42 115**




**77 72 115**

| Product Number | Packaging | ↔ Inch mm | | Head | Handles | Cutting capacities Ø Inch Ø mm | Ø Inch Ø mm | Ø Inch Ø mm | Dimensions A Inch mm | B Inch mm | D Inch mm | lbs |
|---|---|---|---|---|---|---|---|---|---|---|---|---|
| **77 01 115** | | 4 1/2 115 | | mirror polished | plastic coated | 1/64 - 1/16 0.3 - 1.6 | 3/64 1.2 | 1/64 0.3 | 7/16 11.0 | 35/64 14.0 | 19/64 7.5 | 0.15 |
| **77 01 130** | | 5 1/4 130 | | mirror polished | plastic coated | 1/64 - 5/64 0.3 - 2.0 | 1/16 1.5 | 1/32 0.8 | 19/32 15.0 | 23/32 18.3 | 3/8 9.5 | 0.24 |
| **77 02 115** | | 4 1/2 115 | | mirror polished | multi-component grips | 1/64 - 1/16 0.3 - 1.6 | 3/64 1.2 | 1/64 0.3 | 7/16 11.0 | 35/64 14.0 | 19/64 7.5 | 0.18 |
| **77 02 130** | | 5 1/4 130 | | mirror polished | multi-component grips | 1/64 - 5/64 0.3 - 2.0 | 1/16 1.5 | 1/32 0.8 | 19/32 15.0 | 23/32 18.3 | 3/8 9.5 | 0.30 |
| **77 11 115** | | 4 1/2 115 | | mirror polished | single-component grips | 1/64 - 1/16 0.3 - 1.6 | 3/64 1.2 | 1/64 0.3 | 7/16 11.0 | 35/64 14.0 | 19/64 7.5 | 0.18 |
| **77 12 115** | | 4 1/2 115 | | mirror polished | multi-component grips | 1/64 - 1/16 0.3 - 1.6 | 3/64 1.2 | 1/64 0.3 | 35/64 14.0 | 7/16 11.0 | 19/64 7.5 | 0.18 |
| **77 21 115 N** | | 4 1/2 115 | | mirror polished | single-component grips | 1/64 - 3/64 0.3 - 1.3 | 3/64 1.0 | - | 7/16 11.0 | 33/64 | 9/32 7.0 | 0.11 |
| **77 21 130** | | 5 1/4 130 | | mirror polished | single-component grips | 1/64 - 1/16 0.3 - 1.6 | 3/64 1.2 | - | 19/32 15.0 | 23/32 18.3 | 3/8 9.5 | 0.30 |
| **77 22 115** | | 4 1/2 115 | | mirror polished | multi-component grips | 1/64 - 3/64 0.3 - 1.3 | 3/64 1.0 | - | 7/16 11.0 | 35/64 14.0 | 9/32 7.0 | 0.18 |
| **77 22 130** | | 5 1/4 130 | | mirror polished | multi-component grips | 1/64 - 5/64 0.3 - 2.0 | 1/16 1.5 | - | 19/32 15.0 | 23/32 18.3 | 23/64 9.0 | 0.27 |
| **77 32 115** | | 4 1/2 115 | | mirror polished | multi-component grips | 1/64 - 3/64 0.3 - 1.3 | 3/64 1.0 | 1/64 0.5 | 7/16 11.0 | 35/64 14.0 | 19/64 7.5 | 0.18 |
| **77 41 115** | | 4 1/2 115 | | mirror polished | plastic coated | 1/64 - 3/64 0.3 - 1.3 | 1/32 0.8 | - | 35/64 14.0 | 1/2 13.0 | 19/64 7.5 | 0.18 |
| **77 42 115** | | 4 1/2 115 | | mirror polished | multi-component grips | 1/64 - 3/64 0.3 - 1.3 | 1/32 0.8 | - | 7/16 11.0 | 35/64 14.0 | 19/64 7.5 | 0.18 |
| **77 42 130** | | 5 1/4 130 | | | | 1/64 - 1/16 0.3 - 1.6 | 3/64 1.3 | - | 19/32 15.0 | 23/32 18.3 | 3/8 9.5 | 0.18 |
| **77 52 115** | | 4 1/2 115 | | mirror polished | multi-component grips | 1/64 - 3/64 0.3 - 1.0 | 1/32 0.8 | 1/64 0.5 | 7/16 11.0 | 35/64 14.0 | 19/64 7.5 | 0.17 |
| **77 72 115** | | 4 1/2 115 | | mirror polished | multi-component grips | 1/64 - 1/32 0.3 - 0.8 | - | - | 3/8 9.5 | 13/32 10.5 | 15/64 6.0 | 0.15 |

Sets of pliers can be found on page 203

# Electronics Diagonal Cutters ESD

DIN ISO 9654

77

- for fine cutting work in electronics and fine mechanics
- electrically discharging handles – dissipative
- sturdy, zero backlash box-joint
- low-friction double spring for gentle and even opening
- the mirror polish with a fine film of oil, offers effective rust protection – no circuit faults caused by peeling chrome from plated tools
- induction hardened cutting edges (approx. 60 HRC)
- ball bearing steel

**77 02 115 ESD**
Round head, with small bevel; cutting edge hardness approx. 60 HRC

**77 12 115 ESD**
Round head, with bevel and lead catcher - no uncontrolled loss of cut wire ends; cutting edge hardness approx. 62 HRC

**77 22 115 ESD**
Round head, without bevel; cutting edge hardness approx. 57 HRC

**77 32 115 ESD**
Pointed head, with small bevel; cutting edge hardness approx. 60 HRC

**77 42 115 ESD**
Pointed head, without bevel; cutting edge hardness approx. 57 HRC

**77 52 115 ESD**
Pointed, flat head, with small bevel; cutting edge hardness approx. 60 HRC

**77 72 115 ESD**
Pointed mini-head, with small bevel; cutting edge hardness approx. 60 HRC

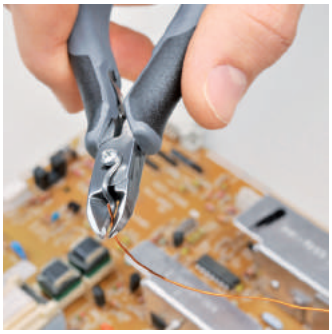

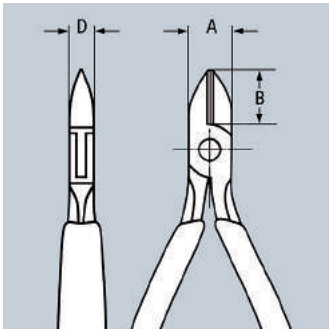





**77 02 115 ESD**




**77 12 115 ESD**




**77 22 115 ESD**




**77 32 115 ESD**

**ESD Pliers (electrostatic discharge)**

Electrostatic energy is discharged through the handles in a gradual and controlled manner which protects components endangered by electrostatic discharge in accordance with applicable standards, e.g. IEC TR 61 340-5, DIN EN 61 340-5, SP Method 2472












**77 42 115 ESD**




**77 52 115 ESD**




**77 72 115 ESD**

| Product Number | Packaging | ↔ Inch mm | | Head | Handles | Cutting capacities ◔ Ø Inch Ø mm | ◑ Ø Inch Ø mm | ◕ Ø Inch Ø mm | Dimensions A Inch mm | B Inch mm | D Inch mm | lbs |
|---|---|---|---|---|---|---|---|---|---|---|---|---|
| **77 02 115 ESD** | | 4 1/2 115 | | mirror polished | ESD multi-component grips | 1/64 - 1/16 0.3 - 1.6 | 3/64 1.2 | 1/64 0.3 | 7/16 11.0 | 35/64 14.0 | 19/64 7.5 | 0.16 |
| **77 12 115 ESD** | | 4 1/2 115 | | mirror polished | ESD multi-component grips | 1/64 - 1/16 0.3 - 1.6 | 3/64 1.2 | 1/32 0.6 | 7/16 11.0 | 35/64 14.0 | 19/64 7.5 | 0.18 |
| **77 22 115 ESD** | | 4 1/2 115 | | mirror polished | ESD multi-component grips | 1/64 - 3/64 0.3 - 1.3 | 3/64 1.0 | - | 7/16 11.0 | 35/64 14.0 | 19/64 7.5 | 0.15 |
| **77 32 115 ESD** | | 4 1/2 115 | | mirror polished | ESD multi-component grips | 1/64 - 3/64 0.3 - 1.3 | 3/64 1.0 | 1/64 0.5 | 7/16 11.0 | 35/64 14.0 | 19/64 7.5 | 0.17 |
| **77 42 115 ESD** | | 4 1/2 115 | | mirror polished | ESD multi-component grips | 1/64 - 3/64 0.3 - 1.3 | 1/32 0.8 | - | 7/16 11.0 | 35/64 14.0 | 19/64 7.5 | 0.17 |
| **77 52 115 ESD** | | 4 1/2 115 | | mirror polished | ESD multi-component grips | 1/64 - 3/64 0.3 - 1.0 | 1/32 0.8 | 1/64 0.5 | 7/16 11.0 | 35/64 14.0 | 19/64 7.5 | 0.17 |
| **77 72 115 ESD** | | 4 1/2 115 | | mirror polished | ESD multi-component grips | 1/64 - 1/32 0.3 - 0.8 | - | - | 7/16 11.0 | 35/64 14.0 | 19/64 7.5 | 0.15 |

Sets of pliers can be found on page 203

# Electronics Diagonal Cutters

with inserted carbide metal cutting edges
DIN ISO 9654

**77 H**

- for extreme demands on cutting pliers caused by hard or tough materials, e.g. piano, nickel, tungsten and diode wire, which are used more frequently in the electronics and aerospace industries
- precision carbide metal cutting edges soldered into forged blanks
- sturdy, zero backlash box-joint
- hardness of the carbide cutting edges (approx. 80 – 83 HRC)
- pliers with carbide metal cutting edges have a substantially longer service life than with conventional cutting edges
- constantly reliable cutting results due to the avoidance of cutter deformations
- high cost savings due to longer service life of the pliers

**77 32 120 H**
Pointed head with chamfer; with small bevel




**77 02 120 H**




**77 32 120 H**

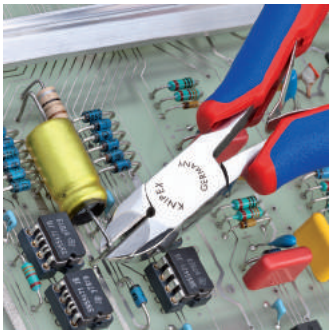

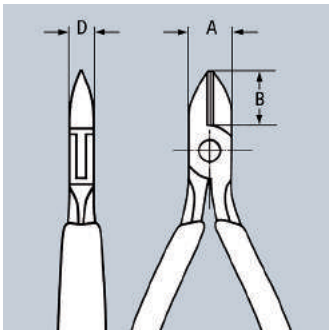


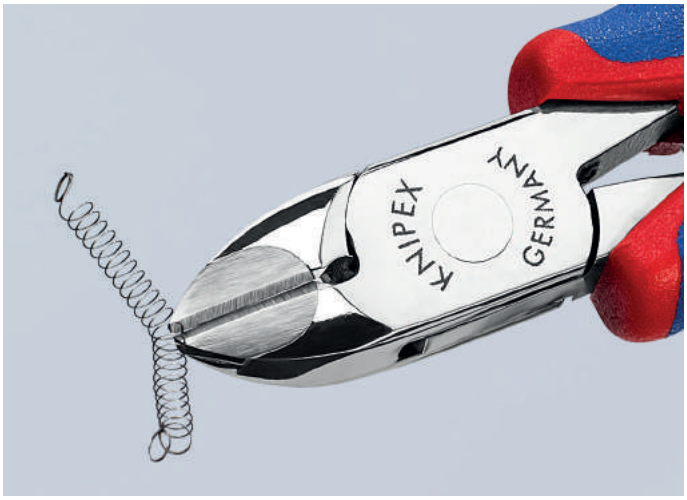





**Inserted Carbide Cutting Edges**
Precision carbide metal cutting edges soldered into forged blanks

| Product Number | Packaging | ↔ Inch mm | | Head | Handles | Cutting capacities ◔ Ø Inch Ø mm | ◑ Ø Inch Ø mm | ◕ Ø Inch Ø mm | ● Ø Inch Ø mm | Dimensions A Inch mm | B Inch mm | D Inch mm | ⚖ lbs |
|---|---|---|---|---|---|---|---|---|---|---|---|---|---|
| **77 02 120 H** | | 4 3/4 120 | | mirror polished | multi-component grips | 5/64 2.0 | 3/64 1.0 | 1/32 0.6 | 1/64 0.2 | 7/16 11 | 9/16 14.3 | 19/64 7.5 | 0.19 |
| **77 02 135 H** | | 5 1/4 135 | | | | 5/64 2.0 | 1/16 1.6 | 3/64 1.2 | 1/32 0.8 | 19/32 15 | 45/64 18 | 3/8 9.5 | 0.26 |
| **77 32 120 H** | | 4 3/4 120 | | mirror polished | multi-component grips | 1/16 1.6 | 1/32 0.6 | 1/64 0.2 | 1/64 0.2 | 7/16 11 | 9/16 14.3 | 19/64 7.5 | 0.17 |

# Electronics Diagonal Cutters ESD

with inserted carbide metal cutting edges
DIN ISO 9654

**77 H**

- for extreme demands on cutting pliers caused by hard or tough materials, e.g. piano, nickel, tungsten and diode wire, which are used more frequently in the electronics and aerospace industries
- precision carbide metal cutting edges soldered into forged blanks
- sturdy, zero backlash box-joint
- hardness of the carbide cutting edges (approx. 80 – 83 HRC)
- pliers with carbide metal cutting edges have a substantially longer service life than those with conventional cutting edges
- constantly reliable cutting results due to the avoidance of cutter deformations
- high cost savings due to longer service life of the pliers
- electrically discharging handles – dissipative (ESD version only)




**77 02 120 H ESD**




**77 02 135 H ESD**

**77 32 120 H ESD**
Pointed head with chamfer; with small bevel

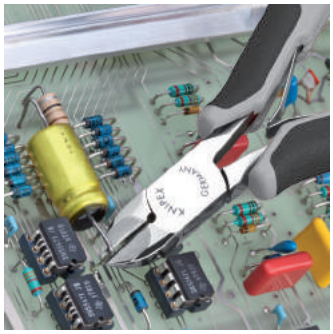

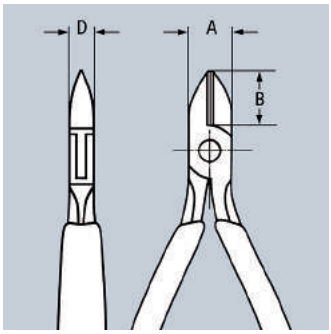


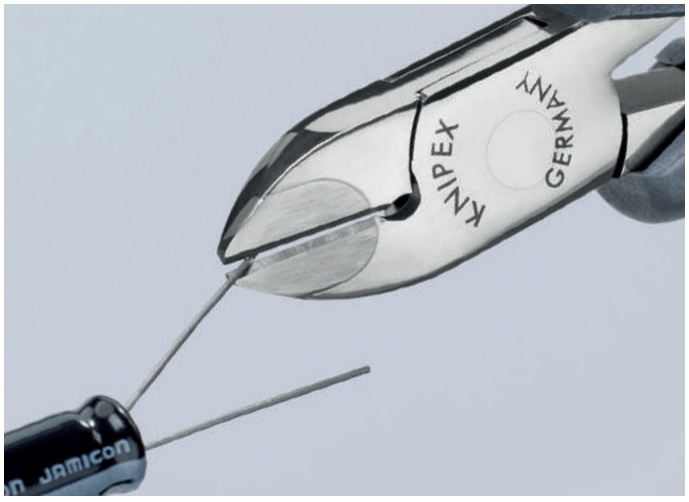


**ESD Pliers (electrostatic discharge)**

Electrostatic energy is discharged through the handles in a gradual and controlled manner which protects components endangered by electrostatic discharge in accordance with applicable standards, e.g. IEC TR 61 340-5, DIN EN 61 340-5, SP Method 2472

| Product Number | Packaging | ↔ Inch mm | | Head | Handles | Cutting capacities ◔ Ø Inch Ø mm | ◑ Ø Inch Ø mm | ◕ Ø Inch Ø mm | ● Ø Inch Ø mm | Dimensions A Inch mm | B Inch mm | D Inch mm | lbs |
|---|---|---|---|---|---|---|---|---|---|---|---|---|---|
| **77 02 120 H ESD** | | 4 3/4 120 | | mirror polished | ESD multi-component grips | 5/64 2.0 | 3/64 1.0 | 1/32 0.6 | 1/64 0.2 | 7/16 11.0 | 9/16 14.3 | 19/64 7.5 | 0.19 |
| **77 02 135 H ESD** | | 5 1/4 135 | | | | 5/64 2.0 | 1/16 1.6 | 3/64 1.2 | 1/32 0.8 | 19/32 15.0 | 45/64 18.0 | 3/8 9.5 | 0.26 |
| **77 32 120 H ESD** | | 4 3/4 120 | | mirror polished | ESD multi-component grips | 1/16 1.6 | 1/32 0.6 | 1/64 0.2 | 1/64 0.2 | 7/16 11.0 | 9/16 14.3 | 19/64 7.5 | 0.17 |

# Electronic Super Knips®
DIN ISO 9654

78

- precision pliers for ultra fine cutting work in electronics and fine mechanics
- ground, very sharp cutting edges without bevel for flush cutting
- precision shaped tips cut wires resting on a board from 1/64" (0.2 mm) dia.
- joint with stainless steel rivet
- extremely smooth movement for minimum operator fatigue
- includes opening spring for easy repetitive work

**78 03 125 / 78 23 125**
Cutting edge hardness approx. 54 HRC; INOX – stainless steel

**78 13 125**
With lead catcher – no uncontrolled loss of cut wire ends; cutting edge hardness approx. 54 HRC; INOX – stainless steel

**78 31 125**
With narrow head; cutting edge hardness approx. 60 HRC; special tool steel, burnished

**78 41 125**
With lead catcher – no uncontrolled loss of cut wire ends; with narrow head; cutting edge hardness approx. 60 HRC; special tool steel, burnished

**78 61 125**
Suitable for cutting glass fiber cables (fiber optics); cutting edge hardness approx. 64 HRC; special tool steel, multi stage oil-hardened

**78 71 125**
With lead catcher – no uncontrolled loss of cut wire ends; cutting edge hardness approx. 64 HRC; special tool steel, burnished

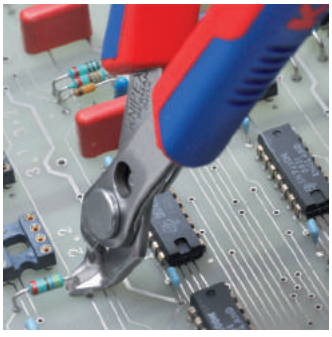



**Models for hard wire**

**78 81 125**
Precision ground cutting edges with very small bevel suitable for hard wire; cutting edge hardness approx. 64 HRC; special tool steel, burnished

**78 91 125**
Precision ground cutting edges with very small bevel suitable for hard wire; with lead catcher – no uncontrolled loss of cut wire ends; cutting edge hardness approx. 64 HRC; special tool steel, burnished




**78 03 125**




**78 13 125**




**78 23 125** ∠60°




**78 31 125**




**78 41 125**



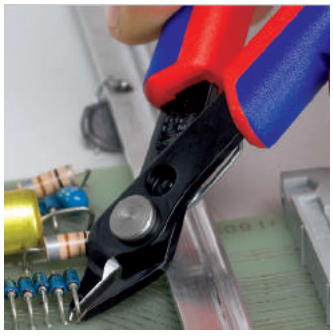

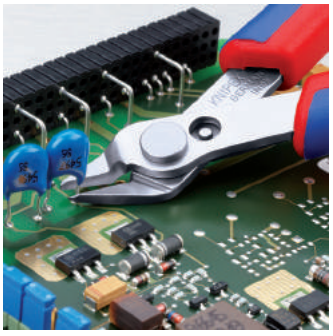

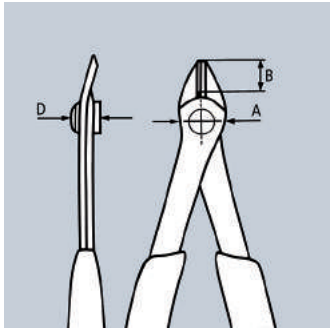


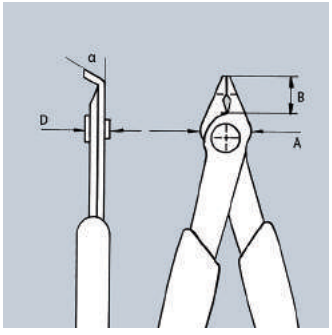





**78 61 125**




**78 71 125**




**78 81 125**




**78 91 125**

| Product Number | Packaging | ↔ Inch / mm | | Pliers | Head | Handles | Cutting capacities Ø Inch / Ø mm | Ø Inch / Ø mm | Ø Inch / Ø mm | Dimensions A Inch / mm | B Inch / mm | D Inch / mm | lbs |
|---|---|---|---|---|---|---|---|---|---|---|---|---|---|
| **78 03 125** | | 5 / 125 | | | polished | multi-component grips | 1/64 - 1/16 / 0.2 - 1.6 | 3/64 / 1.0 | - | 17/32 / 13.5 | 23/64 / 9.0 | 19/64 / 7.5 | 0.13 |
| **78 13 125** | | 5 / 125 | | | polished | multi-component grips | 1/64 - 1/16 / 0.2 - 1.6 | 3/64 / 1.0 | - | 17/32 / 13.5 | 23/64 / 9.0 | 19/64 / 7.5 | 0.14 |
| **78 23 125** | X | 5 / 125 | ∠60° | | polished | multi-component grips | 1/64 - 3/64 / 0.2 - 1.0 | 1/64 / 0.2 | - | 17/32 / 13.5 | 7/32 / 5.5 | 19/64 / 7.5 | 0.12 |
| **78 31 125** | | 5 / 125 | | burnished | | multi-component grips | 1/64 - 3/64 / 0.2 - 1.0 | - | - | 17/32 / 13.5 | 23/64 / 9.0 | 19/64 / 7.5 | 0.13 |
| **78 41 125** | | 5 / 125 | | burnished | | multi-component grips | 1/64 - 3/64 / 0.2 - 1.0 | - | - | 17/32 / 13.5 | 23/64 / 9.0 | 19/64 / 7.5 | 0.14 |
| **78 61 125** | X | 5 / 125 | | burnished | | multi-component grips | 1/64 - 1/16 / 0.2 - 1.6 | 3/64 / 1.2 | - | 17/32 / 13.5 | 23/64 / 9.0 | 19/64 / 7.5 | 0.13 |
| **78 71 125** | | 5 / 125 | | burnished | | multi-component grips | 1/64 - 1/16 / 0.2 - 1.6 | 3/64 / 1.2 | - | 17/32 / 13.5 | 23/64 / 9.0 | 19/64 / 7.5 | 0.14 |
| **78 81 125** | | 5 / 125 | | burnished | | multi-component grips | 5/64 - 1/16 / 1.2 - 1.6 | 3/64 / 1.2 | 1/64 / 0.2 | 17/32 / 13.5 | 23/64 / 9.0 | 19/64 / 7.5 | 0.14 |
| **78 91 125** | | 5 / 125 | | burnished | | multi-component grips | 5/64 - 1/16 / 1.2 - 1.6 | 3/64 / 1.2 | 1/64 / 0.2 | 17/32 / 13.5 | 23/64 / 9.0 | 19/64 / 7.5 | 0.14 |

# Electronic Super Knips®
DIN ISO 9654

78

- precision pliers for ultra fine cutting work in electronics and fine mechanics
- electrically discharging handles – dissipative (ESD versions only)
- ground, very sharp cutting edges without bevel for flush cutting
- precision shaped tips cut wires resting on a board from 1/64" (0.2 mm) dia.
- joint with stainless steel rivet
- extremely smooth movement for minimum operator fatigue
- includes opening spring for easy repetitive work

**78 03 125 ESD**
Cutting edge hardness approx. 54 HRC; INOX – stainless steel

**78 13 125 ESD**
With lead catcher – no uncontrolled loss of cut wire ends; cutting edge hardness approx. 54 HRC; INOX – stainless steel

**78 61 125 ESD**
Cutting edge hardness approx. 64 HRC; special tool steel, burnished

**78 71 125 ESD**
With lead catcher – no uncontrolled loss of cut wire ends; cutting edge hardness approx. 64 HRC; special tool steel, burnished



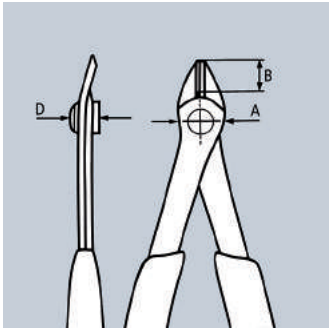


**ESD Pliers (electrostatic discharge)**

Electrostatic energy is discharged through the handles in a gradual and controlled manner which protects components endangered by electrostatic discharge in accordance with applicable standards, e.g. IEC TR 61 340-5, DIN EN 61 340-5, SP Method 2472






**78 03 125 ESD**

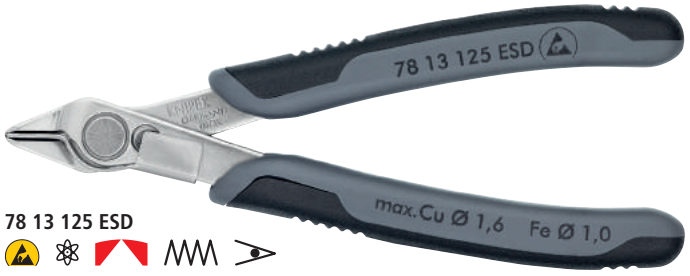


**78 13 125 ESD**




**78 61 125 ESD**




**78 71 125 ESD**

| Product Number | Packaging | ↔ Inch mm | | Head | Handles | Cutting capacities Ø Inch Ø mm | Ø Inch Ø mm | Dimensions A Inch mm | B Inch mm | D Inch mm | lbs |
|---|---|---|---|---|---|---|---|---|---|---|---|
| **78 03 125 ESD** | | 5 125 | | polished | ESD multi-component grips | 1/64 - 1/16 0.2 - 1.6 | 3/64 1.0 | 17/32 13.5 | 23/64 9.0 | 19/64 7.5 | 0.13 |
| **78 13 125 ESD** | | 5 125 | | polished | ESD multi-component grips | 1/64 - 1/16 0.2 - 1.6 | 3/64 1.0 | 17/32 13.5 | 23/64 9.0 | 19/64 7.5 | 0.14 |
| **78 61 125 ESD** | | 5 125 | | burnished | ESD multi-component grips | 1/64 - 1/16 0.2 - 1.6 | 3/64 1.2 | 17/32 13.5 | 23/64 9.0 | 19/64 7.5 | 0.12 |
| **78 71 125 ESD** | | 5 125 | | burnished | ESD multi-component grips | 1/64 - 1/16 0.2 - 1.6 | 3/64 1.2 | 17/32 13.5 | 23/64 9.0 | 19/64 7.5 | 0.14 |

Now available in a 5 1/2" version. The added 1/2" length is for greater stability and cutting performance.

- precision ground cutting edges without bevel for flush cutting the finest of wires e.g. in electronics and precision engineering
- precisely shaped tips also cut adjacent wires from 1/64" (0.20 mm) diameter
- opening spring and opening limiter user-friendly handle width
- extremely smooth movement for minimum operator fatigue

**78 03 140 / 78 03 140 ESD**
Durable and stainless, made from INOX surgical steel, cutting edges hardened to 54 HRC

**78 61 140 / 78 61 140 ESD**
Heavy-duty, made from burnished special tool steel, cutting edges induction hardened (approx. 64 HRC)

**78 03 140 ESD / 78 61 140 ESD**
Allows electrostatic energy to discharge through the handles protecting components from electrostatic discharge




**78 03 140**




**78 61 140 ESD**




5 1/2" (140 mm) length: stronger and extremely versatile



For flush cutting, e.g. to shorten cable ties



Shear cut blade design for precise cutting

| Product Number | Packaging | ↔ Inch mm | | Head | Handles | ◔ Ø Inch Ø mm | ◑ Ø Inch Ø mm | A Inch mm | B Inch mm | D Inch mm | ⚖ lbs |
|---|---|---|---|---|---|---|---|---|---|---|---|
| **78 03 140** | | 5 1/2 140 | | polished | multi-component grips | 1/64 - 1/8 0.2 - 2.1 | 1/16 1.2 | 39/64 15.5 | 31/64 12.5 | 23/64 13.5 | 0.17 |
| **78 03 140 ESD** | | 5 1/2 140 | | polished | ESD multi-component grips | 1/64 - 1/8 0.2 - 2.1 | 1/16 1.2 | 39/64 15.5 | 31/64 12.5 | 23/64 13.5 | 0.17 |
| **78 61 140** | | 5 1/2 140 | | | multi-component grips | 1/64 - 1/8 0.2 - 2.1 | 1/16 1.2 | 39/64 15.5 | 31/64 12.5 | 23/64 13.5 | 0.17 |
| **78 61 140 ESD** | | 5 1/2 140 | | | ESD multi-component grips | 1/64 - 1/8 0.2 - 2.1 | 1/16 1.2 | 39/64 15.5 | 31/64 12.5 | 23/64 13.5 | 0.17 |

# Precision Electronics Diagonal Cutters
DIN ISO 9654

79

- precision pliers for ultra fine cutting work in electronics and fine mechanics
- very precisely ground and sharp cutting edges with very small bevels for precise cutting work on small electronic components
- cutting edge hardness (approx. 64 HRC)
- approx. 20% lighter than conventional electronics pliers
- bolted joint with carefully manufactured joint surfaces for even, low-friction movement throughout the entire opening range
- double spring for a gentle and even opening
- ergonomically optimized handle covers
- ball bearing chrome steel; forged, multi stage oil-hardened

**79 02 120**
Mini-head

**79 02 125**
Round head

**79 12 125**
Specifically for cutting through hard wire and piano wire

**79 22 120**
Mini-head

**79 22 125**
Round head

**79 32 125**
Pointed head

**79 42 125**
Pointed head

**79 52 125**
Pointed head; with lead catcher – no uncontrolled loss of cut wire ends

**79 62 125**
Pointed head; with lead catcher – no uncontrolled loss of cut wire ends




Cut with
79 42 125
(without bevel)

Cut with
79 42 125 Z
(flush cut)



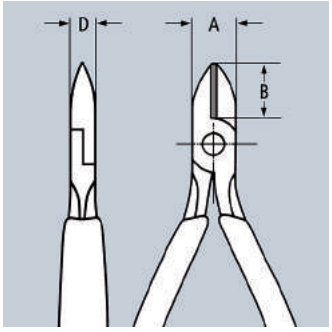


**The Subtle Difference**

KNIPEX precision electronics pliers are made of high-quality ball bearing steel and processed with the highest degree of care. Each opening movement is gentle and even without backlash. Each work step proceeds reliably and precisely. This makes work much easier for professionals.




**79 02 120**




**79 02 125**




**79 22 120**




**79 22 125**




**79 32 125**

Sets of pliers can be found on page 203






**79 42 125**




**79 42 125 Z**

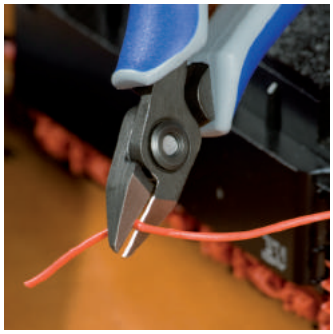



| Product Number | Packaging | ↔ Inch mm | | Pliers | Head | Handles | Cutting capacities ◔ Ø Inch Ø mm | ◑ Ø Inch Ø mm | ◕ Ø Inch Ø mm | ● Ø Inch Ø mm | Dimensions A Inch mm | B Inch mm | D Inch mm | ⚖ lbs |
|---|---|---|---|---|---|---|---|---|---|---|---|---|---|---|
| **79 02 120** | | 4 3/4 120 | | burnished | polished | multi-component grips | 1/64 - 1/16 0.2 - 1.4 | 3/64 1.0 | 1/64 0.2 | - | 23/64 9.0 | 1/4 6.5 | 1/4 6.5 | 0.13 |
| **79 02 125** | | 5 125 | | burnished | polished | multi-component grips | 1/64 - 5/64 0.2 - 1.2 | 3/64 1.3 | 1/32 0.7 | - | 7/16 11.0 | 25/64 10.0 | 1/4 6.5 | 0.13 |
| **79 12 125** | | 5 125 | | burnished | polished | multi-component grips | 1/64 - 5/64 0.3 - 1.2 | 3/64 1.3 | 3/64 1.0 | 1/64 0.2 | 7/16 11.0 | 25/64 10.0 | 1/4 6.5 | 0.13 |
| **79 22 120** | | 4 3/4 120 | | burnished | polished | multi-component grips | 1/64 - 3/64 0.1 - 1.3 | 1/32 0.8 | - | - | 23/64 9.0 | 1/4 6.5 | 1/4 6.5 | 0.13 |
| **79 22 125** | | 5 125 | | burnished | polished | multi-component grips | 1/64 - 5/64 0.1 - 1.2 | 3/64 1.0 | - | - | 7/16 11.0 | 25/64 10.0 | 1/4 6.5 | 0.13 |
| **79 32 125** | | 5 125 | | burnished | polished | multi-component grips | 1/64 - 1/16 0.2 - 1.5 | 3/64 1.1 | 1/64 0.2 | - | 7/16 11.0 | 7/16 11.0 | 1/4 6.5 | 0.13 |
| **79 42 125** | | 5 125 | | burnished | polished | multi-component grips | 1/64 - 1/16 0.1 - 1.5 | 1/32 0.8 | - | - | 7/16 11.0 | 7/16 11.0 | 1/4 6.5 | 0.13 |
| **79 42 125 Z** | | 5 125 | | burnished | polished | multi-component grips | up to 1/64 up to 0.2 | - | - | - | 7/16 11.0 | 7/16 11.0 | 1/4 6.5 | 0.13 |
| **79 52 125** | | 5 125 | | burnished | polished | multi-component grips | 1/64 - 1/16 0.2 - 1.7 | 1/32 0.9 | 1/64 0.5 | - | 7/16 11.0 | 7/16 11.0 | 1/4 6.5 | 0.13 |
| **79 62 125** | | 5 125 | | burnished | polished | multi-component grips | 1/64 - 1/16 0.1 - 1.7 | 1/32 0.8 | - | - | 7/16 11.0 | 7/16 11.0 | 1/4 6.5 | 0.13 |

# Precision Electronics Diagonal Cutters ESD

DIN ISO 9654

79

## Electrically discharging handles – dissipative

- precision pliers for ultra fine cutting work in electronics and fine mechanics
- very precisely ground and sharp cutting edges with very small bevels for precise cutting work on small electronic components
- cutting edge hardness (approx. 64 HRC)
- approx. 20% lighter than conventional electronics pliers
- bolted joint with particularly carefully manufactured joint surfaces for even, low-friction movement throughout the entire opening range
- double spring for a gentle and even opening
- ergonomically optimized handle covers
- ball bearing chrome steel; forged, multi stage oil-hardened

**79 02 120 ESD**
Mini-head

**79 02 125 ESD**
Round head

**79 12 125 ESD**
Specifically for cutting through hard wire and piano wire

**79 22 120 ESD**
Mini-head

**79 22 125 ESD**
Round head

**79 32 125 ESD**
Pointed head

**79 42 125 ESD**
Pointed head

**79 52 125 ESD**
Pointed head; with lead catcher – no uncontrolled loss of cut wire ends

**79 62 125 ESD**
Pointed head; with lead catcher – no uncontrolled loss of cut wire ends



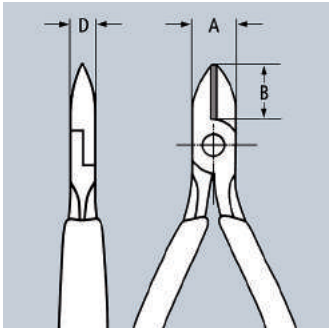


Sets of pliers can be found on page 203




**79 02 120 ESD**




**79 02 125 ESD**




**79 22 120 ESD**




**79 22 125 ESD**




**79 32 125 ESD**




**79 42 125 ESD**

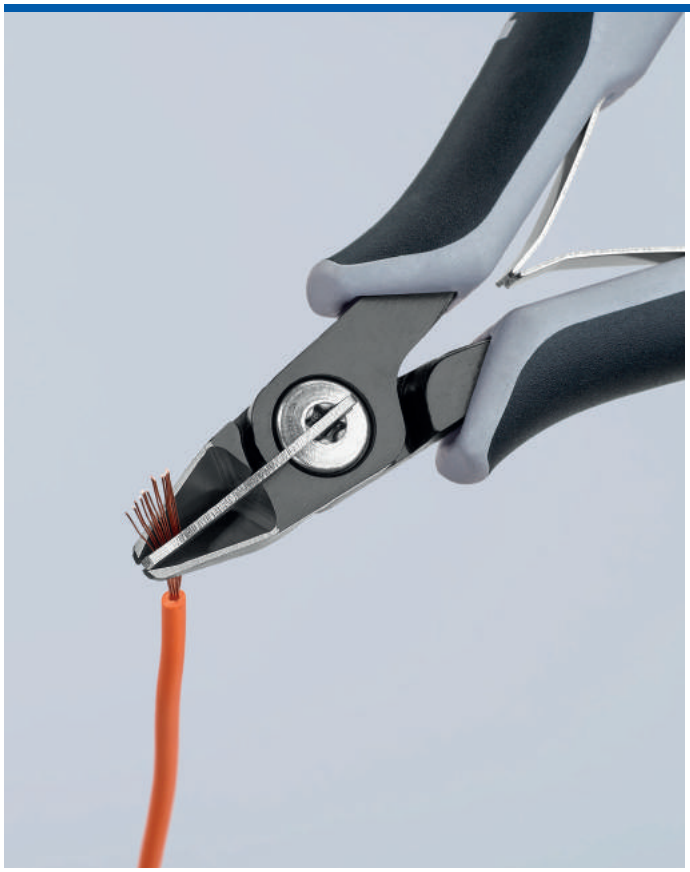





**ESD Pliers (electrostatic discharge)**

Electrostatic energy is discharged through the handles in a gradual and controlled manner which protects components endangered by electrostatic discharge in accordance with applicable standards, e.g. IEC TR 61 340-5, DIN EN 61 340-5, SP Method 2472

| Product Number | Packaging | ↔ Inch mm | | Pliers | Head | Handles | Cutting capacities ◔ Ø Inch Ø mm | ◑ Ø Inch Ø mm | ◕ Ø Inch Ø mm | ● Ø Inch Ø mm | Dimensions A Inch mm | B Inch mm | D Inch mm | ⚖ lbs |
|---|---|---|---|---|---|---|---|---|---|---|---|---|---|---|
| **79 02 120 ESD** | | 4 3/4 120 | | burnished | polished | ESD multi-component grips | 1/64 - 1/16 0.2 - 1.4 | 3/64 1.0 | 1/32 0.6 | - | 23/64 9.0 | 1/4 6.5 | 1/4 6.5 | 0.13 |
| **79 02 125 ESD** | | 5 125 | | burnished | polished | ESD multi-component grips | 1/64 - 5/64 0.2 - 2.0 | 3/64 1.3 | 1/32 0.7 | - | 7/16 11.0 | 25/64 10.0 | 1/4 6.5 | 0.13 |
| **79 12 125 ESD** | | 5 125 | | burnished | polished | ESD multi-component grips | 1/64 - 5/64 0.3 - 2.0 | 3/64 1.3 | 3/64 1.0 | 1/64 0.2 | 7/16 11.0 | 25/64 10.0 | 1/4 6.5 | 0.13 |
| **79 22 120 ESD** | | 4 3/4 120 | | burnished | polished | ESD multi-component grips | 1/64 - 3/64 0.1 - 1.3 | 1/32 0.8 | - | - | 23/64 9.0 | 1/4 6.5 | 1/4 6.5 | 0.13 |
| **79 22 125 ESD** | | 5 125 | | burnished | polished | ESD multi-component grips | 1/64 - 5/64 0.1 - 2.0 | 3/64 1.0 | - | - | 7/16 11.0 | 25/64 10.0 | 1/4 6.5 | 0.13 |
| **79 32 125 ESD** | | 5 125 | | burnished | polished | ESD multi-component grips | 1/64 - 1/16 0.2 - 1.5 | 3/64 1.1 | 1/64 0.2 | - | 7/16 11.0 | 7/16 11.0 | 1/4 6.5 | 0.13 |
| **79 42 125 ESD** | | 5 125 | | burnished | polished | ESD multi-component grips | 1/64 - 1/16 0.1 - 1.5 | 1/32 0.8 | - | - | 7/16 11.0 | 7/16 11.0 | 1/4 6.5 | 0.13 |
| **79 42 125 Z ESD** | | 5 125 | | burnished | polished | ESD multi-component grips | up to 1/64 up to 0.2 | - | - | - | 7/16 11.0 | 7/16 11.0 | 1/4 6.5 | 0.13 |
| **79 52 125 ESD** | | 5 125 | | burnished | polished | ESD multi-component grips | 1/64 - 1/16 0.2 - 1.7 | 1/32 0.9 | 1/64 0.5 | - | 7/16 11.0 | 7/16 11.0 | 1/4 6.5 | 0.13 |
| **79 62 125 ESD** | | 5 125 | | burnished | polished | ESD multi-component grips | 1/64 - 1/16 0.1 - 1.7 | 1/32 0.8 | - | - | 7/16 11.0 | 7/16 11.0 | 1/4 6.5 | 0.13 |

# Pipe and Connector Pliers
for traps, tube fittings and connectors



## For pipes, and connectors up to 3 5/32" (80 mm) diameter

## Fine push-button adjustment for the perfect fit on different sized workpieces

- ideal for tightening and loosening screw connections, plastic pipe fittings and round nuts
- soft jaw version is an ideal tool for cannon plugs in aviation and electrical connections in high performance automotive, truck and trailer applications
- for gentle loosening of hoses on nozzles
- 25 adjustment positions
- robust, heavy-duty box-joint design
- ergonomic handle geometry
- chrome vanadium electric steel; forged, oil-hardened

**81 01 250**
With serrated gripping jaws; up to 3 5/32" (80 mm) dia.

**81 11 250**
With exchangeable plastic jaws for sensitive surfaces; up to 3" (75 mm) dia.




**81 01 250**




**81 11 250**











| Product Number | Packaging | ↔ Inch / mm | | Pliers | Handles | Capacity Ø Inch / Ø mm | Adjustment positions | lbs |
|---|---|---|---|---|---|---|---|---|
| **81 01 250** | X | 10 / 250 | | black atramentized | non-slip plastic coated | 1 - 3 5/32 / 25 - 80 | 25 | 0.76 |
| **81 11 250** | X | 10 / 250 | | black atramentized | non-slip plastic coated | 3/8 - 3 / 10 - 75 | 25 | 0.76 |

| | |
|---|---|
| **81 19 250** | 1 pair of plastic jaws for 81 11 250 |

## Pipe Wrenches 90°
DIN 5234

**83 1**





- Swedish pattern
- 90° angled jaws
- jaws with offset teeth in opposite directions for a strong grip
- induction hardened teeth for long life
- i-beam handle design
- captive adjusting nut
- red powder-coated, jaws bright ground
- chrome vanadium electric steel; forged, multi stage oil-hardened



**83 10 015**
90°

| Product Number | Packaging | ↔ Inch mm | | Pliers | Ø Inch Ø mm | Inch | lbs |
|---|---|---|---|---|---|---|---|
| **83 10 010** | | 12 1/4 310 | | | 1 21/32 42 | 1 | 1.74 |
| **83 10 015** | | 16 1/2 420 | | | 2 3/64 60 | 1 1/2 | 3.08 |
| **83 10 020** | | 22 560 | 90° | red powder-coated | 2 3/4 70 | 2 | 5.37 |
| **83 10 030** | | 25 1/2 650 | | | 4 3/8 110 | 3 | 7.44 |
| **83 10 040** | | 29 1/2 750 | | | 5 1/8 130 | 4 | 10.56 |

## Pipe Wrenches 45°
DIN 5234

**83 2**





- Swedish pattern
- 45° angled jaws
- jaws with offset teeth in opposite directions for a strong grip
- induction hardened teeth for long life
- i-beam handle design
- captive adjusting nut
- red powder-coated, jaws bright ground
- chrome vanadium electric steel; forged, multi stage oil-hardened



**83 20 015**
45°

| Product Number | Packaging | ↔ Inch mm | | Pliers | Ø Inch Ø mm | Inch | lbs |
|---|---|---|---|---|---|---|---|
| **83 20 010** | | 12 1/2 320 | | | 1 21/32 42 | 1 | 1.74 |
| **83 20 015** | | 17 430 | 45° | red powder-coated | 2 3/64 60 | 1 1/2 | 3.13 |
| **83 20 020** | | 22 1/2 570 | | | 2 3/4 70 | 2 | 5.5 |

## Pipe Wrenches S-Type
DIN 5234

**83**
3





- slim, s-type jaw
- jaws with offset teeth in opposite directions for a strong grip
- induction hardened teeth for long life
- three-point gripping on pipes, self-locking
- i-beam handle design
- captive adjusting nut
- red powder-coated, jaws bright ground
- chrome vanadium electric steel; forged, multi stage oil-hardened

**83 30 015**



| Product Number | Packaging | ↔ Inch mm | | Pliers | Ø Inch Ø mm | Inch | lbs |
|---|---|---|---|---|---|---|---|
| **83 30 005** | | 9 1/2 245 | | red powder-coated | 1 3/8 35 | 1/2 | 1.04 |
| **83 30 010** | | 12 1/2 320 | | | 1 21/32 42 | 1 | 1.86 |
| **83 30 015** | | 16 1/2 420 | | | 2 3/64 60 | 1 1/2 | 3.31 |
| **83 30 020** | | 21 1/4 540 | | | 2 3/4 70 | 2 | 5.68 |
| **83 30 030** | | 26 3/4 680 | | | 4 3/4 120 | 3 | 9.33 |

## Pipe Wrenches S-Type
with rapid adjustment

**83**
6

- time-saving, precise adjustment of the opening width at the press of a button directly on the workpiece
- less effort required due to self-locking action
- no unintentional shifting of the pliers
- pinch guard prevents operators´ fingers being pinched
- maximum load capacity due to completely hardened handles
- high-wear resistance due to the induction hardened teeth
- chrome vanadium electric steel; forged, multi stage oil-hardened





**83 60 010**



**83 61 010**

| Product Number | Packaging | ↔ Inch mm | | Pliers | Handles | Ø Inch Ø mm | Inch | lbs |
|---|---|---|---|---|---|---|---|---|
| **83 60 010** | | 13 330 | | red powder-coated | - | 1 21/32 42 | 1 | 1.96 |
| **83 60 015** | | 16 1/2 420 | | | | 2 3/64 60 | 1 1/2 | 3.30 |
| **83 61 010** | | 13 330 | | grey powder-coated | plastic coated | 1 21/32 42 | 1 | 2.11 |
| **83 61 015** | | 16 1/2 420 | | | | 2 3/64 60 | 1 1/2 | 3.24 |
| **83 61 020** | | 22 560 | | | | 2 3/4 70 | 2 | 5.47 |

## Cycle Pliers
DIN ISO 5743

84

- for very narrow screw connections
- special tool steel; forged, oil-hardened

**84 11 200**
Straight head

**84 21 200**
20° angled head



**84 11 200**



**84 21 200**
20°

| Product Number | Packaging | ↔ Inch mm | | Pliers | Head | Handles | Recess Ø Inch Ø mm | Head thickness Inch mm | lbs |
|---|---|---|---|---|---|---|---|---|---|
| **84 11 200** | | 8 200 | | black atramentized | polished | plastic coated | 15/64 / 25/64 6 / 10 | 9/64 3.5 | 0.39 |
| **84 21 200** | | 8 200 | 20° | black atramentized | polished | plastic coated | 15/64 / 25/64 6 / 10 | 9/64 3.5 | 0.40 |

## KNIPEX SmartGrip®
Water Pump Pliers with automatic adjustment
DIN ISO 8976

85

- ideal for frequent changeovers to workpieces of different sizes
- automatic adjustment for one-hand operation both for right-handed and left-handed use
- good access to the workpiece due to the slim dimensions in the head and joint area and flush joint bolt
- self-locking on pipes and nuts: no slipping off the workpiece and low handforce required
- gripping surfaces with special hardened teeth, teeth hardness (approx. 61 HRC): low wear and reliable gripping
- box-joint design: high stability because of double guide
- pinch guard prevents operators´ fingers being pinched
- locking lever for space saving transport with reliable closed handles
- chrome vanadium electric steel; forged, multi stage oil-hardened




**85 01 250 US**

Adjustment to the workpiece is automatic with the KNIPEX SmartGrip®! Just grip the pliers handles and squeeze – it's that easy!



| Product Number | Packaging | ↔ Inch mm | Pliers | Head | Handles | Ø Inch Ø mm | Inch mm | lbs |
|---|---|---|---|---|---|---|---|---|
| **85 01 250 US** | | 10 250 | grey atramentized | polished | non-slip plastic coated | 1 1/4 32 | 1 13/32 36 | 0.82 |

# Spring Hose Clamp Pliers

85
51

Removing spring hose clamps has never been easier. These Hose Clamp Pliers have rotatable tips, making them maneuverable from different angles and easier to use in confined areas.

7 1/4" version is perfect for smaller engines up to 2"

10" version can be used on a variety of clamps up to 2 3/4"

- rotatable tips for securely gripping the clamps in all positions
- jaw inserts can also be rotated under load
- extremely good leverage which allows clamps to be opened and moved easily without great effort
- slim head design, narrow head width, and rotatable grip inserts make this an ideal tool especially in confined areas
- detach hoses gently using the serrated jaw behind the tips
- chrome vanadium electric steel; forged, oil-hardened




**85 51 180 A**




**85 51 250 A**

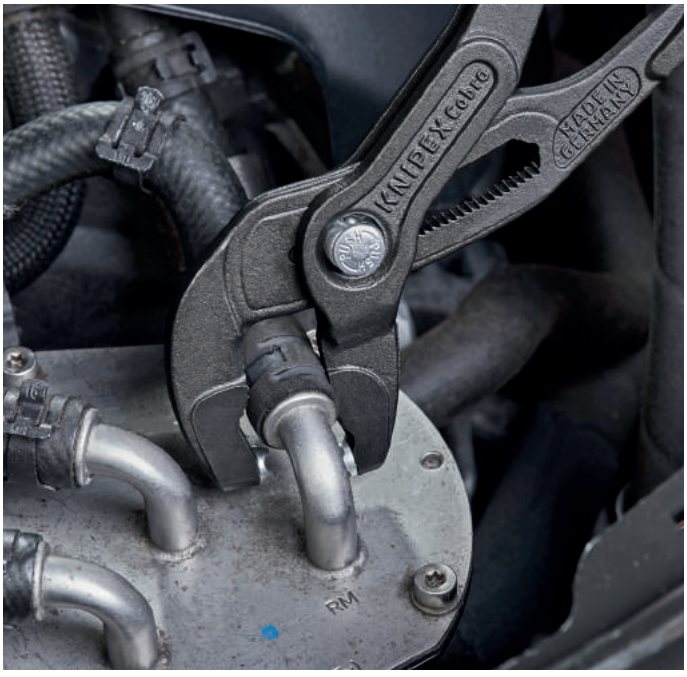


A single pair of pliers for various sizes of clamps up to 2 3/4" diameter. Rotating jaw inserts enable them to adapt to any position while still guaranteeing that clamps are securely positioned in the pliers.

APPLICATION AREAS CARS / TRUCKS
Air suction, cooling, charge air, water return, thermostat, fuel, heating












| Product Number | Packaging | ↔ Inch mm | | Pliers | Handles | Gripping capacity Ø Inch | Adjustment positions | ⚖ lbs |
|---|---|---|---|---|---|---|---|---|
| **85 51 180 A** | X | 7 1/4 180 | | grey atramentized | non-slip plastic coated | 2 | 15 | 0.39 |
| **85 51 250 A** | X | 10 250 | | | | 2 3/4 | 25 | 0.75 |

| | |
|---|---|
| **85 59 250 A** | Spare part grip insert assortment for 85 51 180 A / 85 51 250 A / 85 51 250 AF |

## Spring Hose Clamp Pliers
with locking device

**85 51**




The locking device keeps the clamp open and stays locked in position without the need to grip and hold onto the pliers until the user is ready to move the clamp.

One-hand release

- rotatable tips for securely gripping the clamps in all positions
- jaw inserts can also be rotated under load
- extremely good leverage which allows clamps to be opened and moved easily without great effort
- slim head design, narrow head width, and rotatable grip inserts make this an ideal tool especially in confined areas
- detach hoses gently using the serrated jaw behind the tips
- chrome vanadium electric steel; forged, oil-hardened




**85 51 250 AF**

| Product Number | Packaging | ↔ Inch mm | | Pliers | Handles | Gripping capacity Ø Inch | Adjustment positions | ⚖ lbs |
|---|---|---|---|---|---|---|---|---|
| **85 51 250 AF** | X | 10 250 | | grey atramentized | non-slip plastic coated | 2 3/4 | 19 | 0.77 |

| | |
|---|---|
| **85 59 250 A** | Spare part grip insert assortment for 85 51 250 A / 85 51 250 AF |

## Hose Clamp Pliers
for Click Clamps

**85 51**




**85 51 180 C**




**85 51 250 C**

Opening and closing Click Clamps does not require a special skill; it requires a special tool. No need to replace the OEM clamp with a screw clamp, these pliers will not harm the clamps they're compressing, allowing them to be reused over and over again.

- rotating tips for reliably gripping of clamps in any position
- high leverage allows clamps to be opened and closed again comfortably and easily without a great deal of effort
- for easy working on fuel hoses, vacuum pipes with suction nozzles and many other applications
- detach hoses gently using the serrated jaw behind the tips
- slim head design, narrow head width, and rotatable grip inserts make this an ideal tool especially in confined areas
- chrome vanadium electric steel; forged, oil-hardened



Hose clamp without limit stop



Hose clamp with limit stop



Serrated gripping jaws for easy loosening of tight hoses



Rotating tips

| Product Number | Packaging | ↔ Inch mm | | Pliers | Handles | Diameter Ø inch Ø mm | Adjustment positions | ⚖ lbs |
|---|---|---|---|---|---|---|---|---|
| **85 51 180 C** | X | 7 1/4 180 | | grey atramentized | non-slip plastic coated | 1 3/4 45 | 12 | 0.38 |
| **85 51 250 C** | X | 10 250 | | | | 2 3/4 70 | 15 | 0.75 |

| | |
|---|---|
| **85 59 250 C** | Spare part grip insert assortment for 85 51 180 C / 85 51 250 C |

# Pliers Wrenches

Pliers and a wrench in a single tool

DIN ISO 5743

86

## Replaces a full set of inch and metric open end wrenches

## Smooth jaws for damage free installation of plated fittings – working directly on chrome!

- adjustable tightening tool
- excellent for gripping, holding, pressing and bending applications
- zero backlash jaw surface pressure prevents damage to edges of sensitive components
- adjustment at the touch of a button directly on the workpiece
- parallel jaws allow infinitely variable gripping of all widths to the specified maximum size
- reliable catching of the hinge bolt: no unintentional shifting
- the action of the jaws allows bolted connections to be tightened and released quickly using the ratchet principle
- lever transmission greater than 10 - 1 for strong gripping power
- chrome vanadium electric steel; forged, oil-hardened

**Length 5"**
Mini pliers wrench for precision mechanics; particularly suitable for working on small bolted connections; very good access in very confined spaces

**Length 6"**
Ideal multipurpose wrench in pocket size; indispensable companion in emergency tool kit

**Length 7 1/4"**
With narrow gripping jaws – for fastening/loosening situations requiring a slim tool

**Length 10"**
NOW with 2" capacity, lightweight, thinner head and adjustment scale for presetting the adjustment point

**86 05 180 T BKA / 86 05 250 T BKA***
Pliers with integrated tether attachment point for tool drop protection system

**86 43 250 US**
15° angled pliers handle provides space for counter screw connections or bolted fittings on surfaces

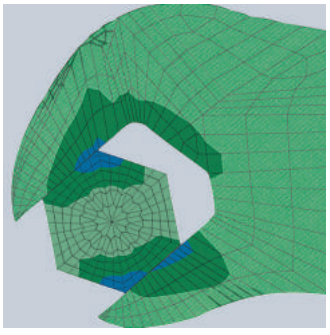

Pliers wrench: zero backlash contact pressure, no damage to edges

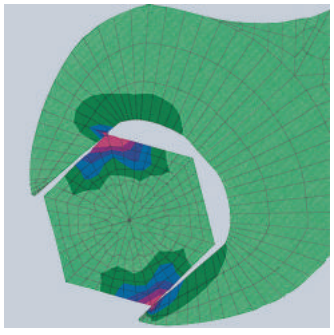

Conventional open end wrench: edge pressure causes surface damage on edges of nuts and bolts



10" Version: opening width lasered onto the pliers head (metric on the front and imperial on the back)

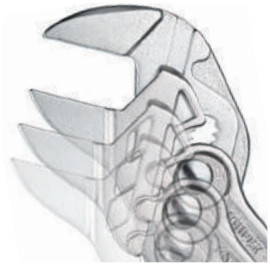

Fast adjustment by pushing a button



**86 03 125**



**86 03 150**



**86 03 180**

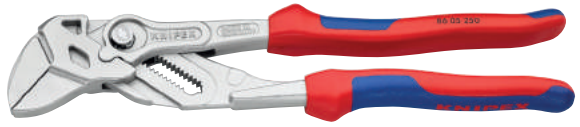

**86 05 250**

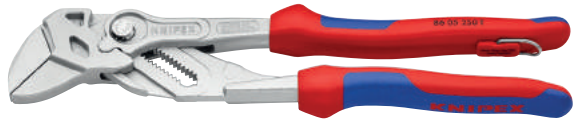

**86 05 250 T**



**86 03 300**



**86 01 250**



**86 06 250 US**
1000 V



**86 43 250 US**
15°



Working on plated fittings without damaging the surface

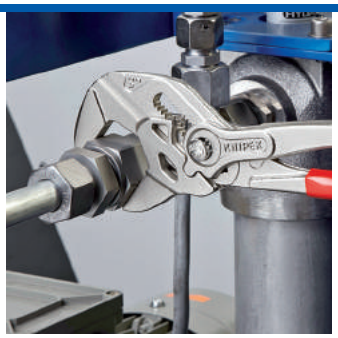

Replaces a full set of inch and metric open end wrenches



Ideal for bending work



Opening width lasered onto the pliers head (metric on the front and imperial on the back)



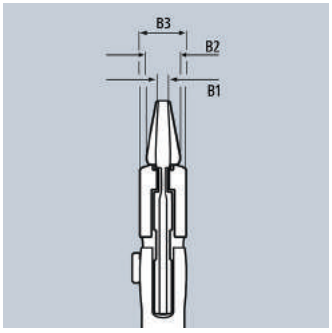


The smooth jaws grip all parallel surfaces in the capacity range with a high degree of pressure if necessary and open up almost unlimited application possibilities for the pliers wrench: e.g. for tightening locknuts, exerting pressure to activate the adhesive power of contact adhesives, edge breaking in tile work, snapping cable ties, utilization as a small vice.

| Product Number | Packaging | ↔ Inch mm | | Pliers | Handles | ⬡↕ Inch mm | Adjustment positions | Dimensions B1 Inch mm | B2 Inch mm | B3 Inch mm | ⚖ lbs |
|---|---|---|---|---|---|---|---|---|---|---|---|
| **86 01 250** | X | 10 250 | | black atramentized | non-slip plastic coating | 2 52 | 19 | 5/16 8.0 | 5/16 8.0 | 35/64 14.0 | 1.00 |
| **86 02 250** | X | 10 250 | | black atramentized | multi-component grips | 2 52 | 19 | 5/16 8.0 | 5/16 8.0 | 35/64 14.0 | 1.03 |
| **86 03 125** | X | 5 125 | | chrome plated | plastic coated | 7/8 23 | 11 | 1/8 3.0 | 13/64 5.0 | 3/8 9.5 | 0.23 |
| **86 03 150** | X | 6 150 | | | | 1 27 | 14 | 3/16 4.7 | 9/32 7.0 | 13/32 10.5 | 0.39 |
| **86 03 180** | X | 7 1/4 180 | | | | 1 3/8 35 | 13 | 13/64 5.0 | 5/16 8.0 | 15/32 12.0 | 0.56 |
| **86 03 250** | X | 10 250 | | | | 2 52 | 19 | 5/16 8.0 | 5/16 8.0 | 35/64 14.0 | 1.18 |
| **86 03 300** | X | 12 300 | | | | 2 3/8 60 | 22 | 3/8 9.5 | 3/8 9.5 | 19/32 15.0 | 1.61 |
| **86 05 150** | | 6 150 | | chrome plated | multi-component grips | 1 27 | 14 | 3/16 4.7 | 9/32 7.0 | 13/32 10.5 | 0.43 |
| **86 05 180** | X | 7 1/4 180 | | | multi-component grips | 1 3/8 35 | 13 | 13/64 5.0 | 5/16 8.0 | 15/32 12.0 | 0.61 |
| **86 05 180 T BKA** | X | 7 1/4 180 | | | multi-component grips, integrated tether attachment point | 1 3/8 35 | 13 | 13/64 5.0 | 5/16 8.0 | 15/32 12.0 | 0.66 |
| **86 05 250** | X | 10 250 | | | slim multi-component grips | 2 52 | 19 | 5/16 8.0 | 5/16 8.0 | 35/64 14.0 | 1.26 |
| **86 05 250 T BKA** | X | 10 250 | | | multi-component grips, integrated tether attachment point | 2 52 | 19 | 5/16 8.0 | 5/16 8.0 | 35/64 14.0 | 1.35 |
| **86 06 250 US** | X | 10 250 | 1000 V | chrome plated | insulated with multi-component grips, VDE-tested | 2 52 | 19 | 5/16 8.0 | 5/16 8.0 | 35/64 14.0 | 1.14 |
| **86 43 250 US** | X | 10 250 | 15° | chrome plated | plastic coated | 1 3/4 46 | 19 | 5/16 8.0 | 5/16 8.0 | 35/64 14.0 | 1.19 |

*Learn more about our tethered tool system on pages 207-211

# Pliers Wrench XL

Pliers and a wrench in a single tool
DIN ISO 5743

**86 03**



**86 03 400 US**

## The unique installation tool now in 16" (400 mm) length
## For opening widths up to 3 3/8" (85 mm)

- excellent for gripping, holding, pressing and bending applications
- optimized adjustment to the workpiece with hand-friendly position of grips
- reliable catching of the hinge bolt: no unintentional shifting
- lever transmission greater than 10 – 1 for strong gripping power
- adjustable tightening tool
- replaces diverse, expensive, large open end wrenches up to 3 3/8"
- parallel jaws allow infinitely variable gripping of all widths to the specified maximum size
- smooth jaws, for gentle installation of quality union joints made from brass, red brass or stainless steel
- zero backlash jaw surface pressure prevents damage to edges of sensitive components
- the action of the jaws allows bolted connections to be tightened and released quickly using the ratchet principle
- adjustment at the touch of a button directly on the workpiece
- chrome vanadium electric steel; forged, oil-hardened

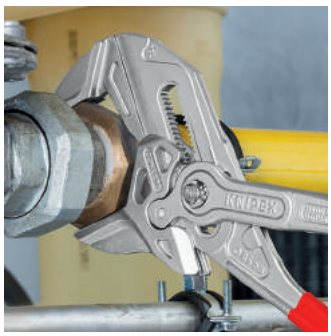





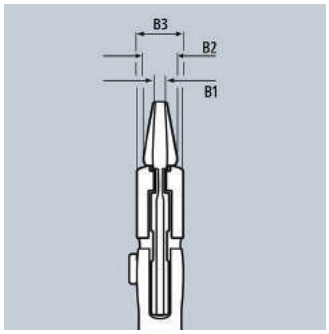


Open end wrenches with fixed opening widths are expensive, especially when used for large union joints.
The KNIPEX Pliers Wrench XL, with its' adjustable jaw opening up to AF 3 3/8" (85 mm), offers enormous savings potential.

| Product Number | Packaging | ↔ Inch / mm | Pliers | Handles | ⬡ Inch / mm | Adjustment positions | Dimensions B1 Inch / mm | B2 Inch / mm | B3 Inch / mm | ⚖ lbs |
|---|---|---|---|---|---|---|---|---|---|---|
| **86 03 400 US** | | 16 / 400 | chrome plated | plastic coated | 3 3/8 / 85 | 25 | 31/64 / 12.5 | 5/8 / 16 | 25/32 / 20 | 3.22 |

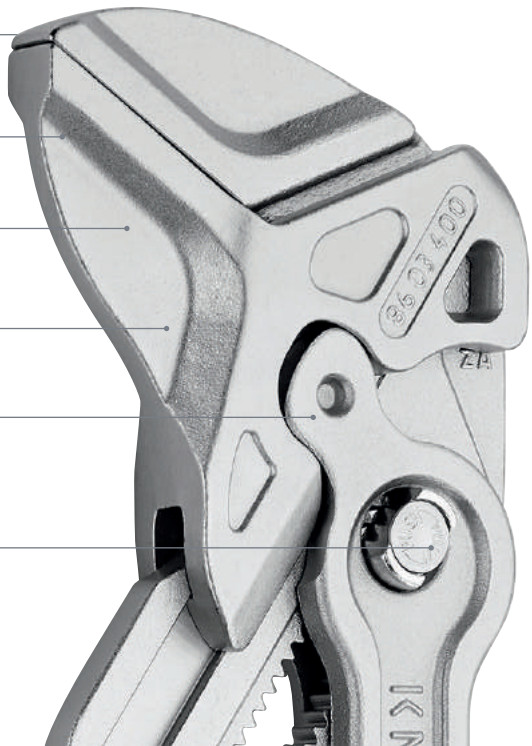

adjustable tightening tool – replaces diverse, expensive, large open end wrenches

parallel jaws give a more solid grip; its design allows flexible adjustment up to a maximum size of 3 3/8"

smooth jaws, for damage free installation of quality union joints made from brass, red brass, stainless steel or chrome plated material

zero backlash jaw pressure prevents damage to edges of sensitive components

the ratchet type principle allows quick and easy tightening and release of bolted connections

push-button for adjustment on the workpiece


8603400
KNIPEX
MADE IN GERMANY
85 mm

# KNIPEX Cobra®

High-Tech Water Pump Pliers
DIN ISO 8976

**87 0**

Cobra®

- adjustment at the touch of a button directly on the workpiece
- fine adjustment for optimum adaptation to different size workpieces and a comfortable gripping position
- self-locking on pipes and nuts: no slipping off the workpiece and low handforce required
- gripping surfaces with special hardened teeth, teeth hardness (approx. 61 HRC): low wear and reliable gripping
- box-joint design: high stability because of double guide
- reliable catching of the hinge bolt: no unintentional shifting
- pinch guard prevents operators´ fingers being pinched
- chrome vanadium electric steel; forged, multi stage oil-hardened

**87 02 250 / 87 02 250 T BKA**
With slim, two-color multi-component sleeves for better handling and easier transport

**87 02 180 T BKA / 87 02 250 T BKA / 87 02 300 T BKA***
Pliers with integrated tether attachment point for tool drop protection system



Fine adjustment by pushing a button: fast and comfortable



Fast and firm adjustment directly on the workpiece

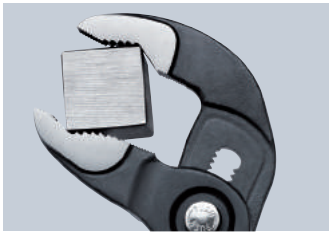

Square

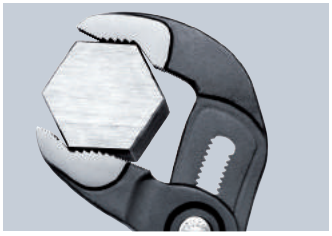

Hex



Round

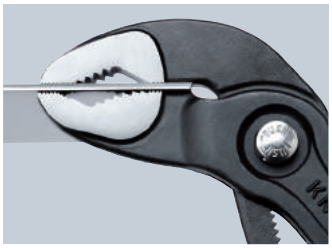

Flat

**KNIPEX Cobra® – the High-Tech Water Pump Pliers**

No more time-consuming test-adjusting of the correct opening size. Just position the upper jaw to the workpiece, push button and slide close the lower jaw, ingeniously simple.



**87 01 125**



**87 01 150**



**87 01 180**



**87 01 250**



**87 01 300**



**87 02 250**



**87 02 250 T BKA**


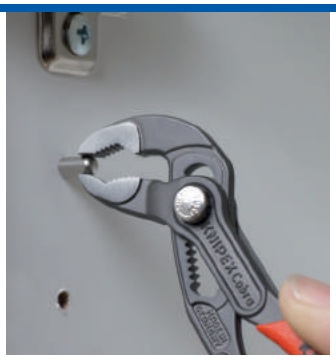





Teeth set against the direction of rotation have a self-clamping effect and prevent slipping off the workpiece

# The Original Push-Button Pliers

| Product Number | Packaging | ↔ Inch mm | | Pliers | Head | Handles | ○ Ø Inch Ø mm | ⬡ Inch mm | Adjustment positions | ⚖ lbs |
|---|---|---|---|---|---|---|---|---|---|---|
| **87 01 125** | X | 5 125 | | grey atramentized | polished | non-slip plastic coated | 1 1/16 27 | 1 1/16 27 | 13 | 0.19 |
| **87 01 150** | X | 6 150 | | grey atramentized | polished | non-slip plastic coated | 1 1/4 32 | 1 3/16 30 | 11 | 0.32 |
| **87 01 180** | X | 7 1/4 180 | | grey atramentized | polished | non-slip plastic coated | 1 1/2 42 | 1 27/64 36 | 18 | 0.40 |
| **87 01 250** | X | 10 250 | | grey atramentized | polished | non-slip plastic coated | 2 50 | 1 3/4 46 | 25 | 0.74 |
| **87 01 300** | X | 12 300 | | grey atramentized | polished | non-slip plastic coated | 2 3/4 70 | 2 3/64 60 | 30 | 1.22 |
| **87 02 180** | X | 7 1/4 180 | | grey atramentized | polished | multi-component grips | 1 1/2 42 | 1 27/64 36 | 18 | 0.43 |
| **87 02 180 T BKA** | X | 7 1/4 180 | | grey atramentized | polished | multi-component grips, integrated tether attachment point | 1 1/2 42 | 1 27/64 36 | 18 | 0.48 |
| **87 02 250** | X | 10 250 | | grey atramentized | polished | slim multi-component grips | 2 50 | 1 3/4 46 | 25 | 0.81 |
| **87 02 250 T BKA** | X | 10 250 | | grey atramentized | polished | slim multi-component grips, integrated tether attachment point | 2 50 | 1 3/4 46 | 25 | 0.81 |
| **87 02 300** | X | 12 300 | | grey atramentized | polished | multi-component grips | 2 3/4 70 | 2 3/64 60 | 30 | 1.33 |
| **87 02 300 T BKA** | X | 12 300 | | grey atramentized | polished | multi-component grips, integrated tether attachment point | 2 3/4 70 | 2 3/64 60 | 30 | 1.40 |

*Learn more about our tethered tool system on pages 207-211

# KNIPEX Cobra® XL/XXL

Pipe Wrenches and High-Tech Water Pump Pliers
DIN ISO 5743

**87 0**

- greater gripping capacity and lighter weight than comparable pipe gripping wrenches
- fast push-button adjustment directly on the workpiece, no unintentional slipping of the joint
- fine adjustment for optimum adaptation to different size workpieces and a comfortable gripping position
- self-locking on pipes and nuts: no slipping off the workpiece and low handforce required
- gripping surfaces with special hardened teeth, teeth hardness (approx. 61 HRC): low wear and reliable gripping
- box-joint design: high stability because of double guide
- pinch guard prevents operators´ fingers being pinched
- chrome vanadium electric steel; forged, multi stage oil-hardened

Cobra®

The KNIPEX Cobra® XL and XXL offer the power and comfort of water pump pliers while being lighter in weight and having a greater gripping capacity than comparable pipe wrenches. The Cobra® XL can grip a 3 1/2" pipe coupling and weighs 50% less than 2" pipe wrenches, which have a much lower gripping capacity. With its compact length of 16" (400 mm), the Cobra XL is perfect for the plumber's toolbox.

The Cobra® XXL with its capacity of up to 4 1/2" only weighs as much a 2" pipe wrench. It's 22" size makes it the biggest pliers around!




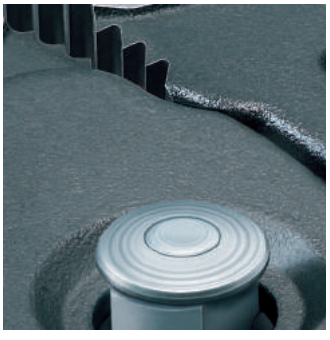

Fine adjustment by pushing a button: fast and comfortable





Fast and firm adjustment directly on the workpiece

| Product Number | Packaging | ↔ Inch mm | | Pliers | Head | Handles | Ø Inch Ø mm | Inch mm | Adjustment positions | lbs |
|---|---|---|---|---|---|---|---|---|---|---|
| **87 01 400 US** | X | 16 400 | | grey atramentized | polished | plastic coated | 3 1/2 90 | 3 3/4 95 | 27 | 2.62 |
| **87 01 560 US** | X | 22 560 | | grey atramentized | polished | plastic coated | 4 1/2 115 | 4 3/4 120 | 20 | 6.06 |

## KNIPEX Cobra®...matic

High-Tech Water Pump Pliers
DIN ISO 8976

**87 1**



**87 11 250**

All features of the KNIPEX Cobra® 87 01 250 along with these special features:

- automatic adjustment at the touch of a button directly on the workpiece
- the securely positioned spring ensures that the pliers close automatically once the push-button is activated (one-hand operation!)
- chrome vanadium electric steel; forged, multi stage oil-hardened

| Product Number | Packaging | ↔ Inch mm | | Pliers | Head | Handles | ○ Ø Inch Ø mm | ⬡ Inch mm | Adjustment positions | ⚖ lbs |
|---|---|---|---|---|---|---|---|---|---|---|
| **87 11 250** | X | 10 250 | | grey atramentized | polished | non-slip plastic coated | 2 50 | 1 13/16 46 | 25 | 0.75 |
| **87 19 250** | Spare spring for 87 11 250 | | | | | | | | | |

## KNIPEX Cobra® QuickSet

High-Tech Water Pump Pliers
DIN ISO 8976

**87 2**



**87 21 250**



**87 21 300**



**87 22 250**

Fully open, push, grab!

Fast adjustment on the workpiece by sliding the pliers handle

- combines the proven, reliable locking of the hinge bolt with an additional push function which makes it easier to work in very confined and inaccessible areas
- adjustment directly on the workpiece by sliding the pliers handle
- reliable locking of the hinge bolt with the first workload. The gripping width of the pliers is then fixed and can only be adjusted by pressing the button
- the pliers stay locked in place and can only be readjusted by pressing the button and resetting
- chrome vanadium electric steel; forged, multi stage oil-hardened




Press the button – open pliers completely



Position top jaw and simply slide and close pliers



The push-button stays locked in place once the handles are squeezed

### Proven Cobra® functions

- self-locking on pipes and nuts: no slipping off the workpiece and low handforce required
- fine adjustment for optimum adaptation to different size workpieces and a comfortable handle width

| Product Number | Packaging | ↔ Inch mm | | Pliers | Head | Handles | ○ Ø Inch Ø mm | ⬡ Inch mm | Adjustment positions | ⚖ lbs |
|---|---|---|---|---|---|---|---|---|---|---|
| **87 21 250** | X | 10 250 | | grey atramentized | polished | non-slip plastic coated | 2 50 | 1 3/4 46 | 25 | 0.74 |
| **87 21 300** | X | 12 300 | | | | | 2 3/4 70 | 2 3/64 60 | 25 | 1.20 |
| **87 22 250** | X | 10 250 | | grey atramentized | polished | slim multi-component grips | 2 50 | 1 3/4 46 | 25 | 0.81 |

## KNIPEX Cobra® Insulated

High-Tech Water Pump Pliers, Insulated

DIN ISO 8976 IEC 60900 DIN EN 60900

**87 26**

- adjustment by shifting the jaw directly on to the workpiece: fast, secure and comfortable handling
- opening at the touch of a button apart from the workpiece
- fine adjustment for optimum adaptation to different workpiece sizes and comfortable gripping position
- good access to the workpiece due to slim size in the head and joint area
- self-locking on pipes and nuts: no slipping off the workpiece and low handforce required
- gripping surfaces with special hardened teeth, teeth hardness (approx. 61 HRC): low wear and reliable gripping
- box-joint design: high stability because of double guide
- pinch guard prevents operators´ fingers being pinched
- chrome vanadium electric steel; forged, multi stage oil-hardened

The adjustment action to adapt to the workpiece is easy and reliable with the KNIPEX Cobra® Insulated: place the upper gripping jaw of the opened pliers on the workpiece, push pliers to close, done!



**87 28 250 US**

1000 V ASTM



Quick adjustment to the workpiece without using a push-button



Just push the pliers handle to adjust

| Product Number | Packaging | ↔ Inch mm | | Pliers | Head | Handles | Ø Inch Ø mm | Inch mm | Adjustment positions | lbs |
|---|---|---|---|---|---|---|---|---|---|---|
| **87 28 250 US** | X | 10 250 | 1000 V ASTM | grey atramentized | polished | insulated multi-component grips, ASTM-tested | 2 50 | 1 3/4 46 | 24 | 0.88 |

## KNIPEX Raptor™ Pliers

DIN ISO 5743

**87 4**

- for inch and metric nuts and screws with widths across flats from 3/8" - 1 1/4" (10 - 32 mm); self-locking in the range from 11/16" (17 mm): no slipping off the workpiece
- reliable and tight gripping of rounded, rusty or overly painted nuts and screws
- ideal for work on vehicle brake systems
- quick tightening of nuts and bolts using ratchet action
- adjustment at the touch of a button directly on the workpiece, one-hand operation
- fine adjustment for optimum adaptation to different size workpieces and a comfortable gripping position
- box-joint design: high stability because of double guide
- reliable catching of the hinge bolt: no unintentional shifting
- favorable lever action: optimum transmission of force
- pinch guard prevents operators´ fingers being pinched
- replaces a set of wrenches, ideal for tightening locknuts
- chrome vanadium electric steel; forged, multi stage oil-hardened



**87 41 250**

The Raptor Pliers combines the convenience of the comfortable push-button adjustment on the workpiece and the function of an all-purpose tightening tool. Jaw gripping with zero backlash prevents slipping on the bolt head or rounding edges.

Even rusty or thick coated bolted connections which have no surfaces capable of being gripped reliably by a conventional wrench can be managed by the exceptionally powerful closing gripping jaws of this wrench.



Grips rusted nuts with rounded edges




Self-locking: no slipping off workpieces; less effort required



Raptor™ Pliers as the second spanner for tightening locknuts



Fine adjustment by pushing a button: fast and comfortable

| Product Number | Packaging | ↔ Inch mm | | Pliers | Head | Handles | ⬡↕ Inch mm | Adjustment positions | ⚖ lbs |
|---|---|---|---|---|---|---|---|---|---|
| **87 41 250** | X | 10 250 | | grey atramentized | polished | non-slip plastic coated | 3/8 - 1 1/4 10 - 32 | 15 | 0.72 |

## KNIPEX Cobra® ES

High-Tech Water Pump Pliers, extra-slim

DIN ISO 8976

**87** 5



Fine adjustment by pushing a button: fast and comfortable




Slim head and joint area (compared to conventional water pump pliers)

- ideal for service and maintenance, equipment repair, automotive and general industry
- long, narrow jaws
- good access to the workpiece due to very slim construction of head and joint area
- grips flat material due to three-point rest
- adjustment at the touch of a button directly on the workpiece
- fine adjustment for optimum adaptation to different size workpieces and a comfortable gripping position
- self-locking on pipes and nuts: no slipping off the workpiece and low handforce required
- box-joint design: high stability because of double guide
- reliable catching of the hinge bolt: no unintentional shifting
- favorable lever action: optimum transmission of force
- pinch guard prevents operators´ fingers being pinched
- chrome vanadium electric steel; forged, multi stage oil-hardened




Optimum access to the workpiece. Ideal for service and maintenance, equipment repair, automotive and general industry



Grips nuts up to 1 3/8" (34 mm) across flats




**87 51 250**

| Product Number | Packaging | ↔ Inch mm | | Pliers | Head | Handles | ○↕ Ø Inch Ø mm | ⬡↕ Inch mm | Max. parallel opening width Inch mm | Max. gripping depth Inch mm | Adjustment positions | ⚖ lbs |
|---|---|---|---|---|---|---|---|---|---|---|---|---|
| **87 51 250** | X | 10 250 | | grey atramentized | polished | non-slip plastic coated | 1 1/4 32 | 1 3/8 34 | 1 1/2 37 | 1 5/8 42 | 19 | 0.72 |

# KNIPEX Alligator®

Water Pump Pliers

DIN ISO 8976

88

More output and comfort compared to conventional water pump pliers of the same length: offers 9 adjustment positions for 30% more gripping capacity

- good access to the workpiece due to slim size in the head and joint area
- self-locking on pipes and nuts: no slipping off the workpiece and low handforce required
- gripping surfaces with special hardened teeth, teeth hardness (approx. 61 HRC): low wear and reliable gripping
- box-joint design: high stability because of double guide
- robust construction; particularly suitable for outdoor work
- pinch guard prevents operators´ fingers being pinched
- chrome vanadium electric steel; forged, multi stage oil-hardened

**88 02 250 / 88 02 250 T BKA**
Slim, two-color multi-component sleeves for better handling and easier transport

**88 02 250 T BKA / 88 02 300 T BKA***
Pliers with integrated tether attachment point for tool drop protection system











Self-clamping on pipes and nuts: no slipping off the workpiece. Less handforce is required since handles do not need to be squeezed. Simply put pressure on the upper handle for a powerful grip.



**88 01 180**



**88 01 250**



**88 02 250**



**88 02 250 T BKA**



**88 07 300**
1000 V



**88 08 250 US**
1000 V ASTM

# Alligator®
















| Product Number | Packaging | ↔ Inch mm | | Pliers | Head | Handles | Ø Inch Ø mm | Inch mm | Adjustment positions | lbs |
|---|---|---|---|---|---|---|---|---|---|---|
| **88 01 180** | X | 7 1/4 180 | | black atramentized | polished | non-slip plastic coated | 1 1/2 42 | 1 27/64 36 | 9 | 0.40 |
| **88 01 250** | X | 10 250 | | | | | 2 50 | 1 13/16 46 | 9 | 0.75 |
| **88 01 300** | X | 12 300 | | | | | 2 3/4 70 | 2 3/64 60 | 9 | 1.19 |
| **88 02 180** | X | 7 1/4 180 | | black atramentized | polished | multi-component grips | 1 1/2 42 | 1 27/64 36 | 9 | 0.47 |
| **88 02 250** | X | 10 250 | | black atramentized | polished | slim multi-component grips | 2 50 | 1 13/16 46 | 9 | 0.83 |
| **88 02 250 T BKA** | X | 10 250 | | black atramentized | polished | slim multi-component grips, integrated tether attachment point | 2 50 | 1 13/16 46 | 9 | 0.88 |
| **88 02 300** | X | 12 300 | | black atramentized | polished | multi-component grips | 2 3/4 70 | 2 3/64 60 | 9 | 1.30 |
| **88 02 300 T BKA** | X | 12 300 | | black atramentized | polished | multi-component grips, integrated tether attachment point | 2 3/4 70 | 2 3/64 60 | 9 | 1.39 |
| **88 07 300** | | 12 300 | 1000 V | chrome plated | polished | plastic dipped insulated, VDE-tested | 2 3/4 70 | 2 3/64 60 | 9 | 1.46 |
| **88 08 250 US** | X | 10 250 | 1000 V ASTM | black atramentized | polished | insulated, multi-component handles, ASTM-tested | 1 31/32 50 | 1 13/16 46 | 9 | 0.87 |

*Learn more about our tethered tool system on pages 207-211

# KNIPEX Alligator® XL

Pipe Wrench and Water Pump Pliers

DIN ISO 5743

88



## The classic model in 16" (400 mm) length

## Robust construction; particularly suitable for outdoor work

- good access to the workpiece due to slim size in the head and joint area
- pinch guard prevents operators´ fingers being pinched
- gripping surfaces with special hardened teeth, teeth hardness (approx. 61 HRC): low wear and reliable gripping
- self-locking on pipes and nuts: no slipping off the workpiece and low handforce required
- box-joint design: high stability because of double guide
- robust adjustment mechanism, dirt resistant, easy to clean; particularly suitable for outdoor work
- 11-notch adjustment positioning with optimized adjustment to the workpiece and user-friendly handle position
- gripping capacity up to 3 1/2"
- chrome vanadium electric steel; forged, multi stage oil-hardened



**88 01 400**

The KNIPEX Alligator® XL offers the performance and comfort of a water pump pliers while being 50% lighter in weight and having a greater gripping capacity (3 1/2") than comparable pipe wrenches.

With their handy length of 16" there is a place for KNIPEX Alligator® XL in every tool box.

### Robust pliers for very hard applications




gripping surfaces with special hardened teeth, teeth hardness (approx. 61 HRC): low wear and stable gripping

self-locking on pipes and nuts: no slipping off the workpiece and low handforce required

box-joint design: high stability because of the double guide

robust adjustment mechanism, dirt resistant, easy to clean; particularly suitable for outdoor work

11-notch adjustment for optimized adjustment to the workpiece and a comfortable handle position

| Product Number | Packaging | ↔ Inch / mm | | Pliers | Head | Handles | Ø Inch / Ø mm | Inch / mm | Adjustment positions | lbs |
|---|---|---|---|---|---|---|---|---|---|---|
| **88 01 400** | X | 16 / 400 | | black atramentized | polished | non-slip plastic coated | 3 1/2 / 90 | 3 3/4 / 95 | 11 | 2.62 |


KNIPEX
KNIPEX ALLIGATOR
MADE IN GERMANY

## Water Pump Pliers
Slip joint
DIN ISO 8976

**89**



**89 01 250**

- easy, convenient engagement in 5 different positions
- tongue and groove slip joint, self-locking on pipes and nuts
- pinch guard prevents operators´ fingers being pinched
- gripping surfaces with special hardened teeth, teeth hardness (approx. 62 HRC): low wear for secure grip
- chrome vanadium electric steel; forged, multi stage oil-hardened

| Product Number | Packaging | ↔ Inch / mm | | Pliers | Head | Handles | ○ Ø Inch / Ø mm | ⬡ Inch / mm | ⚖ lbs |
|---|---|---|---|---|---|---|---|---|---|
| **89 01 250** | | 10 / 250 | | black atramentized | polished | non-slip plastic coated | 1 5/16 / 34 | 1 27/64 / 36 | 0.75 |

## Mini Water Pump Pliers
Slip joint
DIN ISO 8976

**90**




**90 01 125**

- easy, convenient engagement in 4 different positions
- tongue and groove slip joint
- all strain removed from the joint screw, hence no wear on the pivot
- chrome vanadium electric steel; forged, oil-hardened

| Product Number | Packaging | ↔ Inch / mm | | Pliers | Head | Handles | ○ Ø Inch / Ø mm | ⬡ Inch / mm | ⚖ lbs |
|---|---|---|---|---|---|---|---|---|---|
| **90 01 125** | | 5 / 125 | | black atramentized | polished | non-slip plastic coated | 11/16 / 17 | 35/64 / 14 | 0.23 |

## Pipe Cutter
for flexible pipes and flexible hoses

**90 20**




**90 20 185**

- for cutting thin walled pipes (conduit plastic pipes) and flexible hoses with fabric reinforcement of plastic and rubber up to 1" (25 mm) exterior dia. (not suitable for cutting cables)
- with opening spring and locking lever
- tool body: plastic, fiberglass-reinforced
- blades: special tool steel, oil-hardened, interchangeable



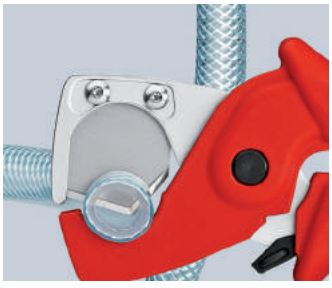



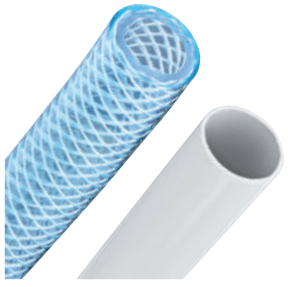

With replaceable blade

| Product Number | Packaging | ↔ Inch / mm | | Handles | Cutting capacities Ø Inch / Ø mm | ⚖ lbs |
|---|---|---|---|---|---|---|
| **90 20 185** | | 7 1/4 / 185 | | tough fiberglass reinforced plastic | 1 / 25 | 0.40 |
| **90 29 185** | Spare blade for 90 20 185 | | | | | |

## Pipe Cutter
for composite pipes and protective tubes

**90 25**



Composite pipes of 1/2" – 1" (12 – 25 mm) dia. are cut cleanly and without deformation



Clean cut of corrugated conduit 3/4" – 1 3/8" (18 – 35 mm) dia.

- for cutting composite pipes with a diameter of 1/2" – 1" (12 - 25 mm) and for cutting corrugated conduit pipes with a diameter of 3/4" – 1 3/8" (18 - 35 mm)
- a calibration arbor can be fitted for Geberit composite pipes with 29/64" and 38/64" (11.5 and 15.0 mm) dia.
- tool body: high-grade chrome vanadium electric steel, oil-hardened
- blades: special tool steel, oil-hardened, interchangeable




**90 25 20**

PATENTED

| Product Number | Packaging | ↔ Inch mm | | Tool | Handles | Cutting capacities composite pipes Ø Inch Ø mm | Cutting capacities protective pipes Ø Inch Ø mm | Blade length Inch mm | ⚖ lbs |
|---|---|---|---|---|---|---|---|---|---|
| **90 25 20** | | 8 1/4 210 | | galvanized | multi-component grips | 1/2 - 1 12 - 25 | 3/4 - 1 3/8 18 - 35 | 1 25 | 0.73 |

| | |
|---|---|
| **90 29 01** | Spare blade for 90 25 20 |
| **90 29 02** | 1 pair of spare blades for 90 25 20 |
| **90 29 15** | Calibration arbor for 90 25 20 |

## Pipe Cutter
for plastic conduit pipes (electrical installation work)

**94 10**






- for clean cutting of plastic pipes (e.g. plastic clad pipes) with a 15/64" – 1 3/8" (6-35 mm) dia.
- not suitable for cutting cables
- blade is replaceable and can be retracted in any position
- low force requirement due to special blade geometry and optimum transmission
- minimum operator fatigue due to ergonomic handle design and ratchet blade feed in stages
- housing: die-cast aluminum, red lacquered
- blade: special tool steel; oil-hardened



**94 10 185**

| Product Number | Packaging | ↔ Inch mm | | Body | Cutting capacities Ø Inch Ø mm | Cutting edge length Inch mm | ⚖ lbs |
|---|---|---|---|---|---|---|---|
| **94 10 185** | | 7 1/4 185 | | die-cast aluminum body, red lacquered | 15/64 - 1 3/8 6.0 - 35.0 | 1 3/8 35 | 1.29 |

| | |
|---|---|
| **94 19 185** | Spare blade for 94 10 185 |
| **94 19 185 02** | Torsion spring for 94 10 185 |

## Pipe Cutter
for composite and plastic pipes

**90 25**

- for cutting thick walled plastic and composite pipes from 1–1 37/64" (26 - 40 mm) dia.
- cuts pipes according to the ratchet principle in several strokes
- self-adapting pipe support positions pipes of various diameters correctly for a rectangular cut
- tool body: high-grade chrome vanadium electric steel, oil-hardened
- blades: special tool steel, oil-hardened, interchangeable



Clean cut of thick-walled plastic and composite pipes



Not suitable for thin-walled conduit pipes. Please use article number 90 20 185 for these




**90 25 40**
PATENTED

| Product Number | Packaging | ↔ Inch mm | | tool | Handles | Cutting capacities Ø Inch Ø mm | Cutting edge length Inch mm | ⚖ lbs |
|---|---|---|---|---|---|---|---|---|
| **90 25 40** | | 8 1/4 210 | | galvanized | multi-component grips | 1 - 1 37/64 26 - 40 | 1 37/64 40 | 1.10 |

| | |
|---|---|
| **90 29 40** | Spare blade for 90 25 40 |

## Punch Lock Riveters

**90 4**

- to join metal section sheets used in dry walling with a lock seam
- for U- and C-shaped sections with max 3/64" (5/64 x 1/64) metal (1.2 mm; 2 x 0.6 mm)
- minimal handforce required due to optimum lever transmission
- pliers body: special tool steel, rolled, oil-hardened



Setting the pliers for connection of two metal section sheets



The punching tool is pressed through the metal section sheets

**90 42 250**
For one-hand operation

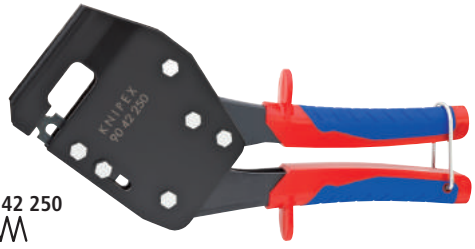


**90 42 250**




**90 42 340**

| Product Number | Packaging | ↔ Inch mm | | Pliers | Handles | Max. Capacity Inch mm | ⚖ lbs |
|---|---|---|---|---|---|---|---|
| **90 42 250** | | 10 250 | | burnished | multi-component grips | 3/64 (5/64 x 1/64) 1.2 (2 x 0.6) | 1.49 |
| **90 42 340** | | 13 25/64 340 | | burnished | multi-component grips | 3/64 (5/64 x 1/64) 1.2 (2 x 0.6) | 1.96 |

| | |
|---|---|
| **90 49 340** | Spare punch for 90 42 340 |
| **90 49 340 M** | Spare die for 90 42 340 |

## Sheet Metal Nibbler

90 55



Notching and chip breaking in a single pass



Notching without chip breaking

- for cutting iron, copper or aluminum plate up to max. 3/64" (1.2 mm) thickness, plastic up to max. 5/64" (2.0 mm) thickness
- materials are cut without deformation
- clean cut edges
- with chip breaker
- easy handling
- cutting width: 7/64" (2.7 mm)
- tool body: special tool steel, rolled, oil-hardened
- blades: special tool steel, oil-hardened, interchangeable



**90 55 280**

**WARNING:** This product can expose you to chemicals including Nickel, which is known to the State of California to cause cancer. For more information go to

| Product Number | Packaging | ↔ Inch mm | | Tool | Handles | ⚖ lbs |
|---|---|---|---|---|---|---|
| **90 55 280** | | 11 280 | | nickel plated | multi-component grips | 1.02 |
| **90 59 280** | Spare blade for 90 55 280 | | | | | |

## Notching Pliers

90 61

- special pliers for notching out recesses in plastic ledges and plastic casing boxes for electric and sanitary installation
- notches can be enlarged by initial and final cut
- clean cut edges
- easy handling
- with opening spring, opening limiter and locking lever
- pliers body: special tool steel, rolled, oil-hardened




**90 61 20** PATENTED





The KNIPEX Notching Pliers produce the most common notches in plastic ledges and cable ducts in a simple, fast and clean way. No time-consuming sawing out or nibbling and no additional work required.

| Product Number | Packaging | ↔ Inch mm | | Pliers | Handles | Capacity | ⚖ lbs |
|---|---|---|---|---|---|---|---|
| **90 61 16** | | 10 250 | | burnished | plastic grips | 5/8 x 1 1/4 Inch 16 x 32 mm | 0.89 |
| **90 61 20** | | 10 250 | | | | 25/32 x 1 9/64 Inch 20 x 29 mm | 0.91 |

## Revolving Punch Pliers

90 7

- for punching holes in leather, textiles and plastic material
- with six rotating punches: 5/64", 3/32", 1/8", 9/64", 5/32", 13/64" (2.0 / 2.5 / 3.0 / 3.5 / 4.0 / 5.0 mm) dia.
- with opening spring and locking lever
- powder-coated for reliable protection against rust
- pliers body and punches: special tool steel, oil-hardened





Interchangeable punches




**90 70 220**

| Product Number | Packaging | ↔ Inch mm | | Pliers | Finish | ⚖ lbs |
|---|---|---|---|---|---|---|
| **90 70 220** | X | 8 3/4 220 | | red powder-coated | powder-coated | 0.55 |

## Tile Nibbling Pincer

Parrot beak pincer

91 0

- enlarges holes in tiles and forms tile edges
- special tool steel; forged, oil-hardened





**91 00 200**

| Product Number | Packaging | ↔ Inch mm | Pliers | Head | ⚖ lbs |
|---|---|---|---|---|---|
| **91 00 200** | | 8 200 | black atramentized | polished | 0.35 |

# Tile Breaking Pliers

91

**Work without cutting-off machine, particularly for fine strips.**
**For less mess, dust, noise and effort.**

For the precise cutting (breaking) of tiles and porcelain stoneware after scoring with a tile cutter

Ideal for long and thick tiles

- parallel jaws evenly distribute force that is 10x your strength
- a precise cut of floor or wall tiles after scoring with a tile cutter
- replaceable plastic positioning jaw tilts for a clean break line and optimum protection of the tiles against damage
- chrome vanadium electric steel, forged, oil-hardened




**91 13 250**









| Product Number | Packaging | ↔ Inch mm | | Pliers | Handles | Adjustment positions | ⚖ lbs |
|---|---|---|---|---|---|---|---|
| **91 13 250** | | 10 250 | | chrome plated | plastic coated | 17 | 1.29 |

| | |
|---|---|
| **91 19 250 01** | Spare jaw for 91 13 250 |

# Glass Breaking Pincer

DIN ISO 5743

91 3

- for breaking glass on a scored line
- special tool steel; forged, oil-hardened




**91 31 180**

| Product Number | Packaging | ↔ Inch mm | | Pliers | Head | Handles | Jaw width Inch mm | ⚖ lbs |
|---|---|---|---|---|---|---|---|---|
| **91 31 180** | | 7 1/4 180 | | black atramentized | polished | plastic coated | 15/16 24 | 0.52 |

## Glass Nibbling Pincers
DIN ISO 5743

**91**

- for breaking off narrow strips of glass to a scored line
- for finishing off glass edges to required profile
- special tool steel; forged, oil-hardened

**91 71 160**
Narrow version, with opening spring

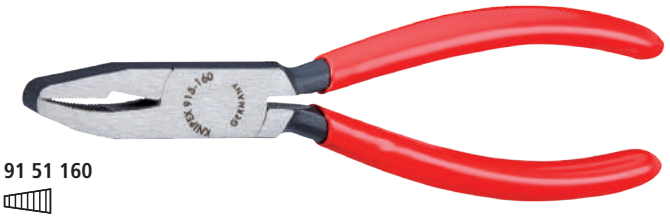

**91 51 160**

| Product Number | Packaging | ↔ Inch mm | | Pliers | Head | Handles | Jaw width Inch mm | ⚖ lbs |
|---|---|---|---|---|---|---|---|---|
| **91 51 160** | | 6 1/4 160 | | black atramentized | polished | plastic coated | 3/8 9.5 | 0.33 |
| **91 71 160** | | 6 1/4 160 | | black atramentized | polished | plastic coated | 5/32 4.0 | 0.31 |

## Flat Nose Grozing Pliers
DIN ISO 5743

**91**
**6**

- with soft gripping jaws
- for trimming glass edges, e. g. when making leaded glass windows
- special tool steel; forged, oil-hardened




**91 61 160**

| Product Number | Packaging | ↔ Inch mm | | Pliers | Head | Handles | Jaw width Inch mm | ⚖ lbs |
|---|---|---|---|---|---|---|---|---|
| **91 61 160** | | 6 1/4 160 | | black atramentized | polished | plastic coated | 3/8 9.5 | 0.31 |

## Hog Ring Pliers

**91**
**92**

- for the professional replacement of automotive upholstery to the seat frame compatible with all popular upholstery rings or hog rings
- recessed groove located in the jaws securely hold the hog rings in the proper position before they are crimped
- closing spring holds the pliers closed which allows for the ring to be securely positioned before being compressed
- high transmission ratio allows for easy compression of the hog rings
- multi-component grips for added hand comfort
- durable and strong
- special tool steel; forged, oil-hardened

Reliable use for repairs to car seats, e.g. to renew seat cover, replace sensor or seat heating mats




**91 92 180**



| Product Number | Packaging | ↔ Inch mm | Pliers | Handles | ⚖ lbs |
|---|---|---|---|---|---|
| **91 92 180** | | 7 1/4 185 | mirror-polished | multi-component grips | 0.43 |

- smooth gripping surfaces
- non-reflective matte finish

**92 02 53**
For SMD-technology*; angled tips, width approx. 3/64" (1 mm); gripping surfaces matte finish for optimum grip; Chrome nickel steel: stainless, anti-magnetic (18/10), very popular electronics quality

**92 02 54**
For SMD-technology*; angled tips, width approx. 3/64" (1 mm) dia.; with integrated profile for reliable gripping of cylindrical components of approx. 1/32" (0.6 mm) dia.; gripping surfaces matte finished for optimum grip; Chrome nickel steel: stainless, anti-magnetic (18/10), very popular electronics quality

**92 02 55**
Gripping jaws 9/64" (3.5 mm) wide, for cylindrical components of 1/8" (0.8 mm) dia.; serrated handles; stainless, anti-magnetic and acid-proof

**92 12 52**
Bent tips; extra strong tips; stainless, anti-magnetic



**92 02 53**
45°



**92 02 54**
45°



**92 02 55**



**92 12 52**
85°

| Product Number | Packaging | ↔ Inch mm | | Finish | lbs |
|---|---|---|---|---|---|
| **92 02 53** | | 4 3/4 120 | 45° | stainless, anti-magnetic | 0.04 |
| **92 02 54** | | 4 3/4 120 | 45° | stainless, anti-magnetic | 0.03 |
| **92 02 55** | | 4 1/2 115 | | stainless, anti-magnetic, acid-proof | 0.04 |
| **92 12 52** | | 4 3/4 120 | 85° | stainless, anti-magnetic | 0.04 |

* SMD-Technology: technique for soldering surface mounted components on printed circuit boards without using holes

# Precision Tweezers ESD



- chrome nickel steel: stainless, anti-magnetic (18/10), very popular electronics quality
- ESD coating: non-reflective black, with a surface resistance of approx. $10^5$ Ohm
- tips non-reflective brushed
- gripping surfaces matte finish for optimum grip

**92 08 78 ESD**
For SMD-technology*; bent tips; smooth gripping surfaces

**92 08 79 ESD**
Shaped to grip horizontal cylindrical components of 3/64" (1 mm) dia.; Smooth gripping surfaces; serrated handles

**92 28 69 ESD**
Straight tips; strong tip; smooth gripping surfaces

**92 28 70 ESD**
Straight tips; fine tip; smooth gripping surfaces

**92 28 71 ESD**
Needle-pointed tips; straight tips; smooth gripping surfaces

**92 28 72 ESD**
Solid; long tips; straight tips; smooth gripping surfaces

**92 38 75 ESD**
Sickle-shaped tips; smooth gripping surfaces

**92 58 74 ESD**
Round tips, approx. 5/64" (2 mm) wide; straight tips; smooth gripping surfaces

**92 78 77 ESD**
Round tips, approx. 9/64" (3.5 mm) wide; straight tips; serrated gripping surfaces; serrated handles

**92 88 73 ESD**
Rectangular tips, approx. 1/32" (0.9 mm) wide; gripping surfaces with fine transverse serration



**92 08 78 ESD**



**92 08 79 ESD**



**92 28 69 ESD**



**92 28 70 ESD**



**92 28 71 ESD**



**92 28 72 ESD**



**92 38 75 ESD**



**92 58 74 ESD**



**92 78 77 ESD**



**92 88 74 ESD**

| Product Number | Packaging | ↔ Inch mm | | Finish | ⚖ lbs |
|---|---|---|---|---|---|
| **92 08 78 ESD** | | 4 3/4 120 | | stainless, anti-magnetic, electrically dissipative | 0.04 |
| **92 08 79 ESD** | | 4 3/4 120 | | stainless, anti-magnetic, electrically dissipative | 0.04 |
| **92 28 69 ESD** | | 5 1/8 130 | | stainless, anti-magnetic, electrically dissipative | 0.04 |
| **92 28 70 ESD** | | 4 1/4 110 | | stainless, anti-magnetic, electrically dissipative | 0.03 |
| **92 28 71 ESD** | | 4 1/4 110 | | stainless, anti-magnetic, electrically dissipative | 0.04 |
| **92 28 72 ESD** | | 5 1/4 135 | | stainless, anti-magnetic, electrically dissipative | 0.05 |
| **92 38 75 ESD** | | 4 3/4 120 | | stainless, anti-magnetic, electrically dissipative | 0.04 |
| **92 58 74 ESD** | | 4 3/4 120 | | stainless, anti-magnetic, electrically dissipative | 0.04 |
| **92 78 77 ESD** | | 5 3/4 145 | | stainless, anti-magnetic, electrically dissipative | 0.06 |
| **92 88 73 ESD** | | 5 1/8 130 | | stainless, anti-magnetic, electrically dissipative | 0.04 |

* SMD-Technology: technique for soldering surface mounted components on printed circuit boards without using holes

# Precision Tweezers
## with pointed shape

92

- for fine mounting work
- straight tips
- smooth gripping surfaces
- particularly slim tips

**92 22 04**
Non-reflective matte finish; gripping surfaces matte finish for optimum grip; Chrome nickel steel: stainless, anti-magnetic (18/10), very popular electronics quality

**92 22 06**
Non-reflective matte finish; gripping surfaces matte finish for optimum grip; Chrome nickel steel: stainless, anti-magnetic (18/10), very popular electronics quality

**92 22 07**
Non-reflective matte finish; stainless, anti-magnetic and acid-proof

**92 23 05**
TITANIUM; electrically conductive; lightweight; non-reflective matte finish; stainless, anti-magnetic and acid-proof

**92 24 01**
Mirror finish nickel plated and polished



**92 22 04**



**92 22 06**



**92 22 07**



**92 23 05**



**92 24 01**

| Product Number | Packaging | ↔ Inch mm | | Finish | ⚖ lbs |
|---|---|---|---|---|---|
| **92 22 04** | | 5 1/8<br>130 | | stainless, anti-magnetic | 0.04 |
| **92 22 06** | | 4 3/4<br>120 | | stainless, anti-magnetic | 0.04 |
| **92 22 07** | | 4 1/2<br>115 | | stainless, anti-magnetic, acid-proof | 0.03 |
| **92 23 05** | | 4 3/4<br>120 | | TITANIUM, anti-magnetic, acid-proof, stainless | 0.02 |
| **92 24 01** | | 4 3/4<br>120 | | chrome plated | 0.04 |

# Precision Tweezers
## with needle-pointed shape

92

- for ultra fine mounting work
- extra fine tips
- smooth gripping surfaces
- stainless, anti-magnetic
- non-reflective matte finish

**92 22 12**
Straight tips

**92 22 13**
Solid; straight tips; stainless, anti-magnetic and acid-proof

**92 32 29**
Sickle-shaped tips; Chrome nickel steel: stainless, anti-magnetic (18/10), very popular electronics quality; gripping surfaces matte finish for optimum grip

**92 34 28**
Bent tips



**92 22 12**



**92 22 13**



**92 32 29**
45°



**92 34 28**
45°

| Product Number | Packaging | ↔ Inch mm | | Finish | ⚖ lbs |
|---|---|---|---|---|---|
| **92 22 12** | | 4<br>105 | | stainless, anti-magnetic | 0.03 |
| **92 22 13** | | 4 3/4<br>120 | | stainless, anti-magnetic, acid-proof | 0.06 |
| **92 32 29** | | 4 3/4<br>120 | 45° | stainless, anti-magnetic | 0.04 |
| **92 34 28** | | 4<br>105 | 45° | stainless, anti-magnetic | 0.03 |

## Precision Tweezers
with dowel pin, pointed shape

92

- universal application
- narrow tips
- gripping surfaces with fine transverse serration
- serrated handles

**92 22 35**
Straight tips; non-reflective matte finish; stainless, anti-magnetic and acid-proof

**92 24 34**
Straight tips; chrome plated

**92 34 36**
Bent tips; chrome plated

**92 34 37**
Bent tips; black non-reflective lacquered



**92 22 35**



**92 24 34**



**92 34 36**
45°



**92 34 37**
45°

| Product Number | Packaging | ↔ Inch mm | | Finish | lbs |
|---|---|---|---|---|---|
| **92 22 35** | | 6 155 | | stainless, anti-magnetic, acid-proof | 0.05 |
| **92 24 34** | | 6 155 | | chrome plated | 0.05 |
| **92 34 36** | | 6 155 | 45° | chrome plated | 0.05 |
| **92 34 37** | | 6 155 | 45° | black lacquered | 0.05 |

## Precision Tweezers Insulated
IEC 60900 DIN EN 60900

92

- insulated and tested according to IEC 60900 : ASTM F1505
- plastic dipped insulated
- nickel plated
- spring steel, high-strength

**92 27 61**
For ultra fine mounting work; extra fine tips; straight tips; gripping surfaces matte finish for optimum grip

**92 27 62**
Straight tips; gripping surfaces with fine transverse serration

**92 37 64**
Bent tips; gripping surfaces with fine transverse serration

**92 67 63**
Straight tips; serrated gripping surfaces




**92 27 61**
1000 V



**92 27 62**
1000 V



**92 37 64**
1000 V 45°



**92 67 63**
1000 V

| Product Number | Packaging | ↔ Inch mm | | Finish | lbs |
|---|---|---|---|---|---|
| **92 27 61** | | 5 1/8 130 | 1000 V | plastic dipped insulated, VDE-tested | 0.07 |
| **92 27 62** | | 6 150 | 1000 V | plastic dipped insulated, VDE-tested | 0.08 |
| **92 37 64** | | 6 150 | 1000 V 45° | plastic dipped insulated, VDE-tested | 0.08 |
| **92 67 63** | | 5 3/4 145 | 1000 V | plastic dipped insulated, VDE-tested | 0.10 |

# Precision Tweezers
## with blunt shape

92

- universal application
- straight tips
- wide, round tips
- serrated handles

**92 44 42**
Jewelers tweezer; round tips, approx. 5/64" (2 mm) wide; gripping jaws with fine cross-hatched serration (cross cut); nickel plated

**92 64 43**
Round tips, approx. 1/8" (3 mm) wide; gripping surfaces with fine transverse serration; chrome plated

**92 64 44**
Round tips, approx. 9/64" (3.5 mm) wide; gripping surfaces with fine transverse serration; chrome plated

**92 70 46**
Round tips, approx. 9/64" (3.5 mm) wide; gripping surfaces with fine transverse serration; black non-reflective lacquered

**92 72 45**
Round tips, approx. 9/64" (3.5 mm) wide; serrated gripping surfaces; non-reflective matte finish; stainless, anti-magnetic and acid-proof



**92 44 42**



**92 64 43**



**92 64 44**



**92 70 46**



**92 72 45**

| Product Number | Packaging | ↔ Inch mm | | Finish | ⚖ lbs |
|---|---|---|---|---|---|
| **92 44 42** | | 5 1/2<br>140 | | nickel plated | 0.05 |
| **92 64 43** | | 4 3/4<br>120 | | chrome plated | 0.04 |
| **92 64 44** | | 5 3/4<br>145 | | chrome plated | 0.06 |
| **92 70 46** | | 5 3/4<br>145 | | black lacquered | 0.06 |
| **92 72 45** | | 5 3/4<br>145 | | stainless, anti-magnetic, acid-proof | 0.06 |

# Precision Tweezers
## round slim shape

92

- round tips, approx. 5/64" (2 mm) wide
- smooth gripping surfaces
- chrome nickel steel: stainless, anti-magnetic and acid-proof



**92 52 23**

| Product Number | Packaging | ↔ Inch mm | | Finish | ⚖ lbs |
|---|---|---|---|---|---|
| **92 52 23** | | 4 3/4<br>120 | | stainless, anti-magnetic, acid-proof | 0.04 |

## Plastic Tweezers 92

> trapezoid shaped tips, approx. 9/64" (3.5 mm) wide
> serrated gripping surfaces
> serrated handles
> tweezers body: solid plastic, temperature-resistant up to 266° F

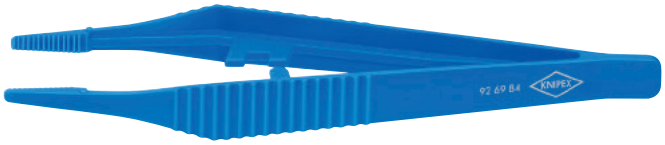

**92 69 84**

| Product Number | Packaging | ↔ Inch mm | | Finish | ⚖ lbs |
|---|---|---|---|---|---|
| **92 69 84** | | 5 1/4<br>130 | | plastic | 0.02 |

## Precision Tweezers 92
rectangular blunt

> mounting tweezer
> rectangular tips, approx. 1/32" (0.9 mm) wide
> gripping surfaces with fine transverse serration
> chrome plated
> spring steel, high-strength



**92 84 18**

| Product Number | Packaging | ↔ Inch mm | | Finish | ⚖ lbs |
|---|---|---|---|---|---|
| **92 84 18** | | 5<br>125 | | chrome plated | 0.04 |

## Crossover Tweezers 92

> for holding small parts without finger pressure
> for efficient clamping
> chrome plated
> spring steel, high-strength

**92 94 91**
Trapezoid shaped, straight tips; gripping surfaces with fine transverse serration; serrated handles

**92 95 89**
Narrow, straight tips; gripping surfaces with fine transverse serration; handles with plastic attachment

**92 95 90**
Narrow, bent tips; gripping surfaces with fine transverse serration; handles with plastic attachment



**92 94 91**



**92 95 89**



**92 95 90**

| Product Number | Packaging | ↔ Inch mm | | Finish | ⚖ lbs |
|---|---|---|---|---|---|
| **92 94 91** | | 6 1/4<br>160 | | chrome plated | 0.08 |
| **92 95 89** | | 6 1/4<br>160 | | chrome plated | 0.07 |
| **92 95 90** | | 6 1/4<br>160 | 45° | chrome plated | 0.07 |

## Cutter
for ribbon cable

**94 15**

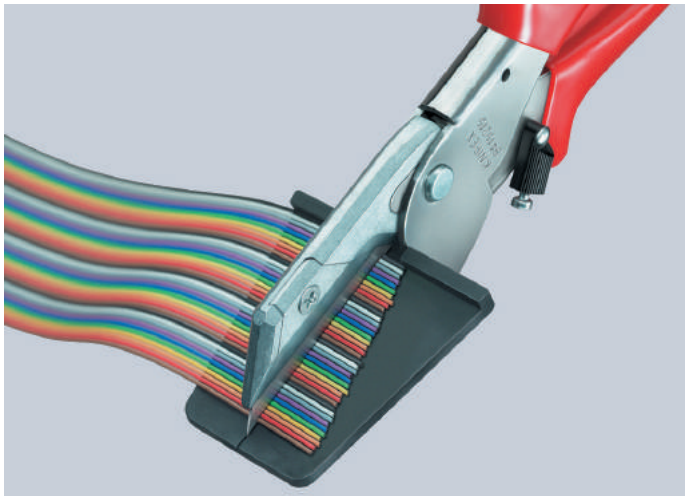

- for crush-free cutting of ribbon cable up to 2 13/64" (56 mm) width
- exchangeable cutting base with fence angle for rectangular cuts
- with opening spring and locking lever
- tool body: tool steel, rolled, oil-hardened
- blade: standard trapezoidal blade, replaceable



**94 15 215**

**WARNING:** This product can expose you to chemicals including Diisononyl Phthalate, which is known to the State of California to cause cancer. For more information go to

| Product Number | Packaging | ↔ Inch mm | | Tool | Handles | Blade length Inch mm | ⚖ lbs |
|---|---|---|---|---|---|---|---|
| **94 15 215** | | 8 1/2 215 | | chrome plated | plastic coated | 2 13/64 56 | 0.76 |

| | |
|---|---|
| **94 19 215** | 10 spare blades for 94 15 215 / 94 35 215 |

## Mitre Shears
for plastic and rubber sections

**94 3**

- for crush-free cutting of plastic, rubber and soft timber sections; also for ribbon cable up to 2 13/64" (56 mm) width
- exchangeable cutting base with fence angle for 45°-cuts and markings for 60°-, 75°-, and 90°-cuts
- with opening spring and locking lever
- tool body: special tool steel, rolled, oil-hardened
- blade: standard trapezoid shaped blade, replaceable





**94 35 215**

**WARNING:** This product can expose you to chemicals including Diisononyl Phthalate, which is known to the State of California to cause cancer. For more information go to

| Product Number | Packaging | ↔ Inch mm | | Tool | Handles | Blade length Inch mm | ⚖ lbs |
|---|---|---|---|---|---|---|---|
| **94 35 215** | | 8 1/2 215 | | chrome plated | plastic coated | 2 13/64 56 | 0.86 |

| | |
|---|---|
| **94 19 215** | 10 spare blades for 94 15 215 / 94 35 215 |

## Vinyl Shears
for cable ducts

**95 02**

- for cutting and shortening cable ducts and for plastic material up to 5/32" (4.0 mm) thickness
- special lever transmission
- very effective blade geometry
- tool body: high-grade chrome vanadium electric steel, oil-hardened
- blade: special tool steel;oil-hardened



**95 02 21**
PATENTED



95 02 21: Blade length 4 1/4" (110 mm) for cutting wide cable ducts

| Product Number | Packaging | ↔ Inch / mm | | Tool | Handles | Cutting capacities Inch / mm | Blade length Inch / mm | ⚖ lbs |
|---|---|---|---|---|---|---|---|---|
| **95 02 21** | | 11 / 275 | | burnished | multi-component grips | 5/32 / 4.0 | 4 1/4 / 110 | 1.47 |

## Anvil Shears
for cutting soft material such as rubber and leather

**94**

- includes opening spring and locking device
- cutting capacity for round material up to 1" (25 mm)
- cuts flat material up to 1.50" (40 mm) max. width
- tool body constructed of rolled and oil-hardened tool steel



**94 55 200**



| Part Number | ↔ inch | ↔ mm | Pliers | Handles | Cutting Capacity | ⚖ lbs |
|---|---|---|---|---|---|---|
| **94 55 200** | 8 | 200 | chrome plated | plastic coated | soft material - rubber, leather and hoses | 0.64 |
| **95 59 200 01** | Spare blade for 94 55 200 | | | | | |

## Shears
for KEVLAR® fibers

**95 03**



- only for cutting fibers of KEVLAR® in optical fiber cables, not recommended for other materials
- precision ground blades with serration prevent the fibers from slipping and guarantees a clean cut
- riveted precision joint, for low-friction movement and smooth and even cutting of the thin KEVLAR® fibers
- hard chrome plated, ground surface
- shears body: chrome vanadium electric steel, oil-hardened
- user-friendly handles: plastic, impact-resistant



**95 03 160 SB**

KEVLAR® is a registered trademark of E. I. du Pont de Nemours and Company

| Product Number | Packaging | ↔ Inch mm | Shears | Handles | ⚖ lbs |
|---|---|---|---|---|---|
| **95 03 160 SB** | | 6 1/4 160 | chrome plated | plastic coated | 0.15 |

## Combination Shears

**95 05**

- for cutting cardboard, plastics, aluminum, brass and copper foils
- not suitable for steel wire or iron sheets
- precision ground, hardened blades
- with opening spring and locking device
- pinch guard prevents operators´ fingers being pinched
- adjustable bolted joint
- shears body: surgical steel, stainless, air-hardened
- handles: plastic, impact-resistant

**95 05 185**
Angled shape – for easy execution of long cuts;
ergonomically shaped plastic handles








**95 05 140**




**95 05 185**
40°




**95 05 190**

⚠ **WARNING:** This product can expose you to chemicals including lead, which is known to the State of California to cause cancer. For more information go to

| Product Number | Packaging | ↔ Inch mm | | Head | Handles | ⚖ lbs |
|---|---|---|---|---|---|---|
| **95 05 140** | | 5 1/2 140 | | polished | plastic coated | 0.15 |
| **95 05 185** | | 7 1/4 185 | 40° | polished | plastic coated | 0.25 |
| **95 05 190** | | 7 1/2 190 | | polished | plastic coated | 0.26 |

## Electricians' Shears 95

Precision ground blades with fine serration for a clean, non-slip cut
Cutting edge with integrated cable cutter
With plastic belt case

- universal shears for electricians
- handles with multi-component grips, fiberglass-reinforced
- cutting edges made from stainless steel, hardness of cutting edges 56 HRC

**95 05 10 SB**
With crimp area for end sleeves (ferrules) up to 6.0 mm²




**95 05 155 SBA**

⚠ **WARNING:** This product can expose you to chemicals including lead, which is known to the State of California to cause cancer. For more information go to




**95 05 10 SB**



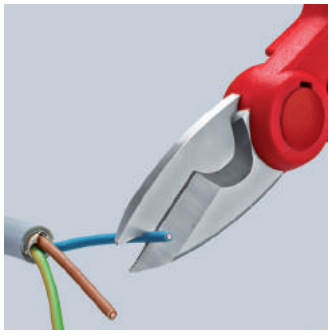







| Product Number | Packaging | ↔ Inch mm | Head | Handles | Capacity mm² | ⚖ lbs |
|---|---|---|---|---|---|---|
| **95 05 155 SBA** | X | 6 1/8 155 | polished | multi-component grips, fiberglass-reinforced | - | 0.24 |
| **95 05 10 SB** | X | 6 1/4 160 | polished | multi-component grips, fiberglass-reinforced | 6.0 | 0.31 |

## Cable Shears 95

- not suitable for steel wire and hard drawn copper conductors
- precision ground, hardened blades
- no crushing, slight deformation of the cable only
- pinch guard prevents operators´ fingers being pinched
- adjustable bolted joint
- shears body: surgical steel, stainless, vacuum-hardened
- handles: plastic, impact-resistant

**95 05 165**
Cuts cables up to 25/64" diameter (10 mm, 24 mm²); with opening spring and locking device; blades made of stainless steel; oil-hardened and tempered

**95 06 230**
For copper conductors single wire up to 5/8" (16 mm²), stranded up to 1/0 AWG (50 mm²), fine stranded up to 2/0 (70 mm²) and aluminum conductors multi wire up to 70 mm²; easy cutting with one-hand operation due to high transmission ratio; stainless – surgical grade – steel, oil-hardened and tempered




**95 05 165**




**95 06 230**
1000 V

| Product Number | Packaging | ↔ Inch mm | | Head | Handles | Cutting capacities Ø Inch Ø mm | Cutting capacities mm² | AWG | ⚖ lbs |
|---|---|---|---|---|---|---|---|---|---|
| **95 05 165** | | 6 1/2 165 | | polished | plastic coated | 25/64 10 | 24 | 6 | 0.25 |
| **95 06 230** | | 9 1/4 230 | 1000 V | polished | plastic insulated, VDE-tested | 5/8 16 | 50 | solid - 1/0 stranded - 2/0 | 0.60 |

# Cable Shears



- for cutting copper and aluminum cables, single and multi-stranded wire
- not suitable for steel wire and hard drawn copper conductors
- precision ground, hardened blades
- clean and smooth cut without crushing and deformation
- easy cutting with one-hand operation
- pinch guard prevents operators´ fingers being pinched
- adjustable bolted joint, self-locking
- high-grade special tool steel; forged, oil-hardened

**Style 2**
Internal opening spring, protected and captive

**Style 4**
Multifunctional tool for working on NYM cable from 3 x 1.5 mm² to 5 x 2.5 mm² (cutting, stripping insulation); universal stripping area for both solid conductor cross-sections; reliable alignment of the cable in the stripping area due to V-shaped blade geometry

**95 12 165 T BKA***
Pliers with integrated tether attachment point for tool drop protection system



Cut performed with a Diagonal Cutter: high effort required, inaccurate cut, considerable deforming and crushing of the cable



Cut performed with a Cable Shear: easy, clean cut without any deformation of the cable



The locking device keeps shears with spring inside the joint closed



**95 11 165**



**95 12 165**



**95 12 165 T BKA**



**95 18 165 US**
1000 V ASTM



**95 21 165**



**95 41 165**

| Product Number | Packaging | ↔ Inch mm | | Tool | Handles | Style | Cutting capacities Ø Inch Ø mm | Cutting capacities mm² | AWG | lbs |
|---|---|---|---|---|---|---|---|---|---|---|
| **95 11 165** | X | 6 1/2 165 | | burnished | plastic coated | 1 | 19/32 15 | 50 | 1/0 | 0.49 |
| **95 12 165** | X | 6 1/2 165 | | burnished | multi-component grips | 1 | 19/32 15 | 50 | 1/0 | 0.55 |
| **95 12 165 T BKA** | X | 6 1/2 165 | | burnished | multi-component grips, integrated tether attachment point | 1 | 19/32 15 | 50 | 1/0 | 0.56 |
| **95 18 165 US** | X | 6 1/2 165 | 1000 V ASTM | burnished | insulated, multi-component grips, ASTM-tested | 1 | 19/32 15 | 50 | 1/0 | 0.58 |
| **95 21 165** | X | 6 1/2 165 | | burnished | plastic coated | 2 | 19/32 15 | 50 | 1/0 | 0.50 |
| **95 22 165** | | 6 1/2 165 | | burnished | multi-component grips | 2 | 19/32 15 | 50 | 1/0 | 0.56 |
| **95 41 165** | | 6 1/2 165 | | burnished | plastic coated | 4 | 15/32 12 | 35 | 1/0 | 0.49 |

*Learn more about our tethered tool system on pages 207-211

# Cable Shears
with twin cutting edge

**95 1**

- for cutting copper and aluminum cables
- not suitable for steel wire and hard drawn copper conductors
- precision ground, hardened blades
- clean and smooth cut without crushing and deformation
- by dividing the cutting actions into initial cut (insulating sheath in the front cutting area) and final cut (conductor in the back cutting area), cables up to 25/32" (20 mm) dia. can be cut in one-hand operation
- less effort required due to favorable lever ratio and optimized cutting-edge geometry
- pinch guard prevents operators´ fingers being pinched
- adjustable bolted joint, self-locking
- high-grade special tool steel; forged, oil-hardened




Initial cut: using the front cutting edge to cut the insulating sheath on larger cable diameters leaves an ergonomic handle opening width.




Final cut: after cutting the sheath in the front profile the conductors are cut in the rear area.




**95 11 200**
PATENTED




**95 12 200**
PATENTED




**95 18 200 SBA**
1000 V ASTM PATENTED

**The twin cutting edge allows a comfortable handle position in all cutting situations inside the specified cutting capacity.**

| Product Number | Packaging | ↔ Inch mm | | Tool | Handles | Cutting capacities Ø Inch Ø mm | mm² | AWG | lbs |
|---|---|---|---|---|---|---|---|---|---|
| **95 11 200** | X | 8 200 | | burnished | plastic coated | 25/32 20 | 70 | 2/0 | 0.65 |
| **95 12 200** | X | 8 200 | | burnished | multi-component grips | 25/32 20 | 70 | 2/0 | 0.74 |
| **95 18 200 SBA** | X | 8 200 | 1000 V ASTM | burnished | insulated, multi-component grips, ASTM-tested | 25/32 20 | 70 | 2/0 | 0.75 |

# Cable Shears 95

## Short design, length only 20" (500 mm)
## Lightweight, high leverage

- for cutting copper and aluminum cables, single and multi-stranded wire
- not suitable for steel wire and wire ropes
- precision ground, hardened blades
- clean and smooth cut without crushing and deformation
- less effort required due to favorable lever ratio and special blade geometry
- pinch guard prevents operators´ fingers being pinched
- adjustable bolted joint
- cutter head: vanadium electric steel, forged, oil-hardened
- handle shank: aluminum tube, high-strength



**95 12 500**



**95 17 500**
1000 V



Large cutting capacity: max. 1 1/16" (27 mm) dia. / 150 mm²

| Product Number | Packaging | ↔ Inch mm | | Head | Handles | Cutting capacities Ø Inch Ø mm | mm² | AWG | lbs |
|---|---|---|---|---|---|---|---|---|---|
| **95 12 500** | | 20 500 | | polished | multi-component grips | 1 1/16 27 | 150 | 5/0 | 2.49 |
| **95 17 500** | | 20 500 | 1000 V | polished | plastic dipped insulated, VDE-tested | 1 1/16 27 | 150 | 5/0 | 3.26 |

# Cable Shears 95

- for cutting copper and aluminum cables, single and multi-stranded wire
- not suitable for steel wire and wire ropes
- precision ground, hardened blades
- clean and smooth cut without crushing and deformation
- favorable lever ratio due to toggle lever
- pinch guard prevents operators´ fingers being pinched
- adjustable bolted joint
- bolted cutter head, replaceable
- blade head: high-grade chrome vanadium electric steel, forged, oil-hardened
- handle: steel tube



**95 27 600**
1000 V

| Product Number | Packaging | ↔ Inch mm | | Head | Handles | Cutting capacities Ø Inch Ø mm | mm² | AWG | lbs |
|---|---|---|---|---|---|---|---|---|---|
| **95 27 600** | | 23 1/2 600 | 1000 V | polished | plastic dipped insulated, VDE-tested | 1 1/16 27 | 150 | 5/0 | 5.08 |
| **95 29 600** | Spare cutter head for 95 27 600 | | | | | | | | |

# Cable Cutters
with ratchet action

95
3

- for cutting copper and aluminum cables, single and multi-stranded wire
- not suitable for steel wire and wire ropes
- precision ground, hardened blades
- clean and smooth cut without crushing and deformation
- one-hand operation using ratchet principle
- minimal handforce required due to very high transmission ratio
- two-stage ratchet drive for easy cutting
- simple handling as a result of lightweight and compact design – can be used even in confined areas
- pinch guard prevents operators´ fingers being pinched
- high-grade special tool steel; forged, oil-hardened

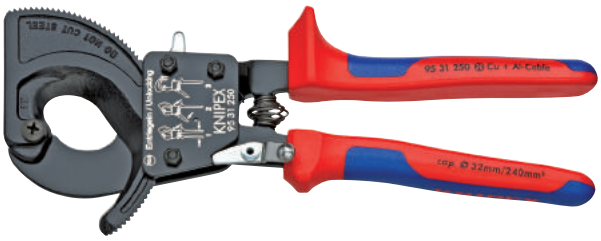

**95 31 250 SBA**



95 31 280: Large cutting capacity: max. 2" (52 mm) dia. / 380 mm²



Ratchet principle and two-stage ratchet drive for easier cutting

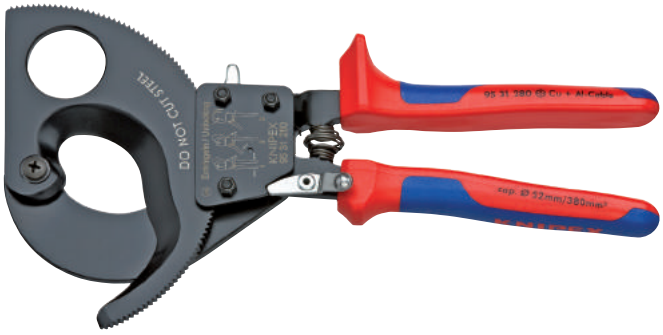

**95 31 280 SBA**



95 31 250/280: Fixed handle with support area as an aid to position the pliers when cutting



**95 36 250 SBA**

1000 V

| Product Number | Packaging | ↔ Inch mm | | Tool | Handles | Cutting capacities Ø Inch Ø mm | mm² | MCM | lbs |
|---|---|---|---|---|---|---|---|---|---|
| **95 31 250 SBA** | X | 10 250 | | black lacquered | multi-component grips | 1 1/4 32 | 240 | 500 | 1.49 |
| **95 31 280 SBA** | X | 11 280 | | black lacquered | multi-component grips | 2 3/64 52 | 380 | 750 | 1.70 |
| **95 36 250 SBA** | X | 10 250 | 1000 V | black lacquered | insulated, multi-component grips, VDE-tested | 1 1/4 32 | 240 | 500 | 1.24 |
| **95 36 280 SBA** | X | 11 280 | 1000 V | black lacquered | insulated, multi-component grips, VDE-tested | 2 3/64 52 | 380 | 750 | 1.64 |

| | |
|---|---|
| **95 39 250** | Movable spare blade for 95 31 250 / 95 36 250 |
| **95 39 280** | Movable spare blade for 95 31 280 / 95 36 280 |

# Cable Shears
with ratchet action and telescopic handles

**95 32**

## Cable shears with adjustable telescopic handles allow angular positioning

- for cable diameters up to 1 1/2" (38 mm), handles can be positioned at an angle to set the optimum handle width, great for work in confined areas
- comfortable work due to ratchet action and lightweight
- heavy-duty telescopic handles made of oval aluminum tubing; extendable up to 30" (770 mm) for maximum leverage on large cable diameters; retractable down to 22" (570 mm) for minimum space requirements during transport
- replaceable cutting head
- extensive cutting range up to 1 1/2" (38 mm) dia. or 550 MCM (280 mm²) in copper and aluminum cables
- easier, neater cut due to optimized cutting edge geometry
- adjustable bolted joint
- cutting head: special quality, high-grade tool steel, oil-hardened
- handles: high-strength oval aluminum tubing




**95 32 038**

Handles are adjustable in length and angular position for easier work. Set the handle length to the optimum position for powerful cutting; put the handles at an angle for a comfortable gripping position.




Setting of a favorable handle width










Thorough cut of the cable by repeat cutting and opening actions




After the first partial cut, the handles open by ratchet action

**WARNING:** This product can expose you to chemicals including Diisononyl Phthalate, which is known to the State of California to cause cancer. For more information go to

| Product Number | Packaging | ↔ Inch mm | | Head | Handles | Cutting capacities Ø Inch Ø mm | mm² | MCM | lbs |
|---|---|---|---|---|---|---|---|---|---|
| **95 32 038** | | 22 7/16 570 | | burnished | multi-component grips | 1 1/2 38 | 280 | 550 | 4.49 |

# Cable Cutters
with ratchet action and telescopic handles

95
32

- for copper and aluminum cables, single and multi-stranded wire – also with hard rubber, plastic sheet metal sheath
- not suitable for steel wire and wire ropes
- minimal handforce required for cutting due to optimum transmission ratio
- high cutting capacity due to two-handed operation and ratchet action
- the blade can be opened in any cutting position
- adjust the handle length to adapt to each individual job and move it to the shorter length for easy transport
- blade: special-quality high-grade tool steel, oil-hardened
- handles: high-strength oval aluminum tubing

**95 32 060**
Tool length: 23 5/8" - 31 1/2" (600 - 800 mm)

**95 32 100**
Tool length: 25 1/2" - 33 7/8" (650 - 850 mm)




**95 32 060**

**WARNING:** This product can expose you to chemicals including Diisononyl Phthalate, which is known to the State of California to cause cancer. For more information go to

| Product Number | Packaging | ↔ Inch mm | | Head | Handles | Cutting capacities Ø Inch Ø mm | mm² | MCM | lbs |
|---|---|---|---|---|---|---|---|---|---|
| **95 32 060** | | 23 5/8 - 31 1/2<br>600 - 800 | | burnished | multi-component grips | 2 3/64<br>60 | 740 | 1400 | 8.47 |
| **95 32 100** | | 25 1/2 - 33 7/8<br>650 - 850 mm | | | | 3 15/16<br>100 | 960 | 1900 | 10.98 |

| | |
|---|---|
| **95 39 720** | Movable spare blade for 95 32 060 |
| **95 39 870** | Movable spare blade for 95 32 100 |



# Cable Cutters (ratchet action)

for steel wire armored cable (SWA-Cable)

95

Cuts through steel wire armored cable with a diameter of up to 45 mm / 380 mm² (e.g. 4 x 95 mm²) using one or two-handed operation

- simple handling due to lightweight (1.82 lbs) and compact design (315 mm length) – can also be used in confined areas
- precision ground blades and induction hardened cutting edges cut smoothly and neatly without crushing
- innovative high leverage three-stage ratchet-drive
- flange on the handle can be used as a support surface when cutting larger diameters
- high-grade special tool steel, forged, oil-hardened
- not suitable for cutting ACSR cable and wire rope!




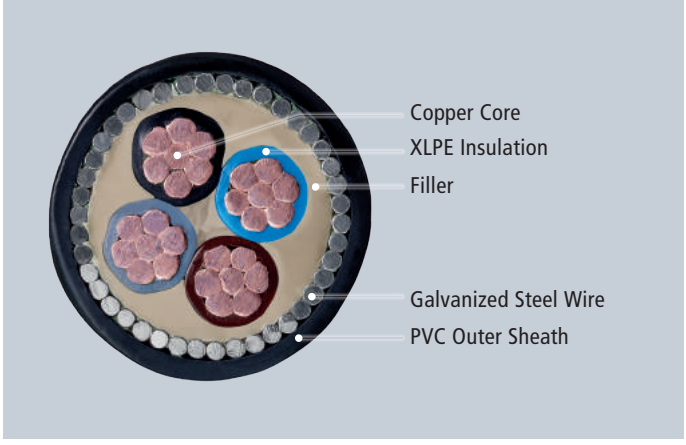


Cross-section of a steel wire armored cable



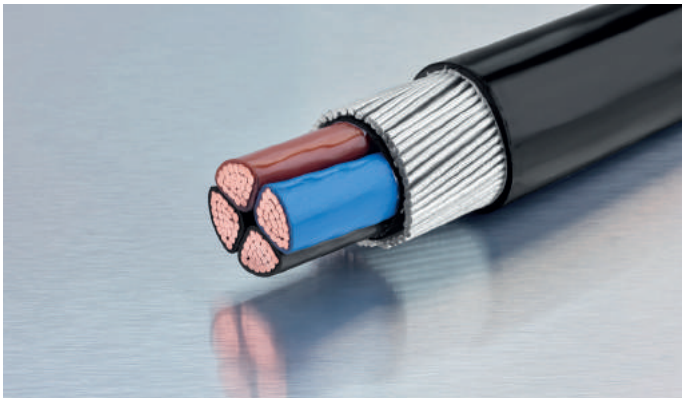

| Product Number | ↔ Inch mm | | Tool | Handles | Cutting capacity Ø mm | Cutting capacity mm² | MCM | lbs |
|---|---|---|---|---|---|---|---|---|
| **95 32 315 A** | 12 13/32 315 | | black lacquered | multi-component grips | 45 | 380 | 750 | 1.80 |
| **95 36 315 A** | 12 13/32 315 | 1000 V | black lacquered | insulated multi-component grips, VDE-tested | 45 | 380 | 750 | 1.80 |

| | |
|---|---|
| **95 39 315 A 01** | Pivot cutter repair kit |
| **95 39 315 A 02** | Fixed cutter repair kit |

## Sturdy, easy to use and stable
## Innovative ratchet drive

- Manual ratchet-action cable cutter for one-hand and two-handed operation for cutting copper and aluminum cables with diameters of up to 2 23/64" (60 mm)
- easy handling due to light weights (1.82 lbs) and compact construction (12 1/2" / 320 mm length) – suitable for use in confined areas
- cuts through copper and aluminum cables with diameters of up to 2 23/64" (60 mm) in one-hand and two-handed operation
- hardened cutting edges, precisely ground, cut smoothly and neatly without crushing
- for cutting copper and aluminum single conductors as well as multi-stranded cables (not suitable for steel wire and wire ropes)
- innovative 3-stage ratchet-drive with high leverage for easy cutting in one-hand and two-handed operation
- flange on the handle can be used as a support surface when cutting larger diameters
- high-grade special tool steel; forged, oil-hardened



**95 32 320**







**The innovative three gear drive permits three operating modes**

- Fast working with full lift of handles and one-hand operation when cutting through insulation material
- Powerfully sliding the sickle knife forward when cutting through the stranded conductor with two hands through use of the central lifting area (handle opening of between 1/3 and 2/3 of total range)
- Powerfully pushing the sickle knife forward with one hand to cut through the stranded conductor through use of the first third of the handle lift with one or two hands

**First manual ratchet-action cable cutter for one-hand and two-handed operation for cutting copper and aluminum cables with diameters of up to 2 23/64" (60 mm)!**

| Product Number | Packaging | ↔ Inch / mm | | Tool | Head | Handles | Cutting capacities Ø Inch / Ø mm | Cutting capacities mm² | MCM | ⚖ lbs |
|---|---|---|---|---|---|---|---|---|---|---|
| **95 32 320** | | 12 1/2 / 320 | | black atramentized | polished | multi-component grips | 2 3/64 / 60 | 600 | 1200 | 1.82 |
| **95 36 320** | | 12 1/2 / 320 | 1000 V | black atramentized | polished | insulated, multi-component grips, VDE-tested | 2 3/64 / 60 | 600 | 1200 | 1.83 |

| | |
|---|---|
| **95 39 320 01** | Pivot cutter repair kit for 95 32 320 and 95 36 320 |
| **95 39 320 02** | Fixed cutter repair kit for 95 32 320 and 95 36 320 |

## ACSR Cable Cutter
with ratchet action for cables with a steel core

95 3





Enormous power with a weight of just 2.87 lbs (1300 g)

### Handy, compact and sturdy
### Extremely robust design

- cuts ACSR 795 kcmil and AAC up to 1 ¼" (32 mm)
- cutters with precision cut and induction hardened cutting edges
- two-stage ratchet drive for easy cutting
- less physical effort due to very high transmission ratio
- fixed handle with support area for laying down the pliers when cutting
- locking mechanism for transporting with safely closed handles
- high-grade special tool steel; forged, multi stage oil-hardened



**95 32 340 SR US**

| Product Number | Packaging | ↔ Inch / mm | | Tool | Handles | Cutting capacities: AAC (All Aluminum Conductor) Ø Inch / Ø mm | Cutting capacities: ACSR (Aluminum Conductor Steel Reinforced) kcmil | lbs |
|---|---|---|---|---|---|---|---|---|
| **95 32 340 SR US** | X | 13 25/64<br>340 | | burnished | multi-component grips | 1 1/4<br>32 | 795 | 2.87 |

## Bowden Cable Cutter

95 6




- for Bowden cables and soft wire rope up to 1/8" (3.0 mm) dia. (also V2A)
- smooth and clean cutting due to special shape of the cutting edges
- sickle shape cutting edges surround the material and prevent the wire rope fanning out
- minimal handforce required due to very high transmission ratio
- with opening spring and locking lever
- induction hardened cutting edges
- high-grade special tool steel; forged, multi stage oil-hardened




**95 61 150 US**

| Product Number | Packaging | ↔ Inch / mm | | Shears | Head | Handles | Cutting capacities Ø Inch / Ø mm | lbs |
|---|---|---|---|---|---|---|---|---|
| **95 61 150 US** | X | 6<br>150 | | black atramentized | polished | plastic coated | 1/8<br>3 | 0.48 |

# Wire Rope Shears
forged

95
6

## Double function: clean cutting, precise crimping

- with two crimping dies for end caps on Bowden cable sheaths and ferrules for wire rope
- comfortable work due to slim design and internal opening spring
- bolted joint for precise blade guidance, readjustable
- high leverage for reduced effort
- cutting edge hardness (approx. 64 HRC)
- chrome vanadium heavy-duty steel; forged, manifold oil-hardened




Crimping of the ferrules onto the traction cable




Crimping of the end caps on the Bowden cable sheath




**95 61 190**






**95 62 190**



**95 62 190 T BKA***
Pliers with integrated tether attachment point for tool drop protection system

Precise guidance through a bolted joint




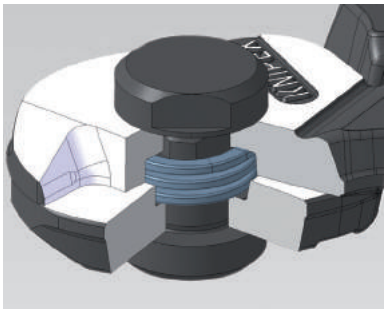

Internal opening spring

Transport lock and opening limiter

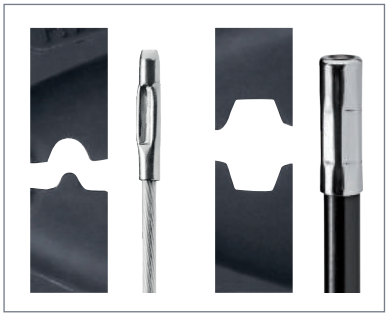

Crimp profiles

- Cuts all wire ropes without splaying, including those that are extremely strong
- Not for electrical end ferrules

| Product Number | Packaging | ↔ Inch mm | | Head | Handles | Cutting capacities ⊛ Ø Inch Ø mm | ◌ Ø Inch Ø mm | ◑ Ø Inch Ø mm | ● Ø Inch Ø mm | ⚖ lbs |
|---|---|---|---|---|---|---|---|---|---|---|
| **95 61 190** | X | 7 1/2 190 | ⊛◌◑●▰▰ | polished | plastic coated | 9/32 7.0 | 13/64 5.0 | 5/32 4.0 | 3/32 2.5 | 0.69 |
| **95 62 190** | X | 7 1/2 190 | ⊛◌◑●▰▰ | burnished | multi-component grips | 9/32 7.0 | 13/64 5.0 | 5/32 4.0 | 3/32 2.5 | 0.69 |
| **95 62 190 T BKA** | X | 7 1/2 190 | ⊛◌◑●▰▰ | burnished | multi-component grips, integrated tether attachment point | 9/32 7.0 | 13/64 5.0 | 5/32 4.0 | 3/32 2.5 | 0.83 |



*Learn more about our tethered tool system on pages 207-211

# Wire Rope Cutter

95

Compact size, lightweight, high performance level
High transmission joint design makes cutting 20 % easier
Box joint design for greater stability

- for cutting high-strength wire ropes up to up to 5/32" (4 mm) and cable 3/16" (6 mm)
- at just 6 1/4" (160 mm) length this tool is considerably more powerful than many larger wire rope cutters
- included thumb lock and opening spring
- ball bearing steel for a long service life
- induction hardened cutting edges
- cuts cleanly and evenly without wire ends splaying or fanning out




**95 62 160**







| Product Number | Packaging | ↔ Inch mm | | Head | Handles | Ø Inch Ø mm | Ø Inch Ø mm | lbs |
|---|---|---|---|---|---|---|---|---|
| **95 62 160** | X | 6 1/4 160 | | polished | multi-component grips | 3/16 6.0 | 5/32 4.0 | 0.38 |

# Cable Cutters for Wire Rope and ACSR

95

- for ACSR, wire ropes, steel rods, copper and aluminum cables
- suitable for cutting overhead cables with strain relief wire
- angular cutting blades prevent fanning out
- optimum transmission ratio for high cutting performance
- bolted cutter head, replaceable
- lightweight
- cutter head: high-grade special tool steel, multi stage oil-hardened
- handles: aluminum, high-strength

**95 81 600**
With reinforced cutter head for higher performance, also cuts piano wire




**95 71 600**



**95 77 600**
1000 V

**WARNING:** This product can expose you to chemicals including Diisononyl Phthalate, which is known to the State of California to cause cancer. For more information go to

| Product Number | Packaging | ↔ Inch mm | | Head | Handles | Cutting capacities mm² | Ø Inch Ø mm | Ø Inch Ø mm | Ø Inch Ø mm | AWG | lbs |
|---|---|---|---|---|---|---|---|---|---|---|---|
| **95 71 445** | | 17 1/2 445 | | polished | plastic grips | 95 | 25/64 10 | 9/32 7 | - | 3/0 | 2.39 |
| **95 71 600** | | 23 5/8 600 | | polished | plastic grips | 150 | 35/64 14 | 23/64 9 | - | 5/0 | 3.84 |
| **95 77 600** | | 23 5/8 600 | 1000 V | polished | plastic dipped insulated, VDE-tested | 150 | 35/64 14 | 23/64 9 | - | 5/0 | 5.02 |
| **95 81 600** | | 23 5/8 600 | | polished | plastic grips | 150 | 5/8 16 | 25/64 10 | 11/64 4.5 | 5/0 | 4.97 |

| | |
|---|---|
| **95 79 445** | Spare cutter head for 95 71 445 |
| **95 79 600** | Spare cutter head for 95 71 600 / 95 77 600 |
| **95 89 600** | Spare cutter head for 95 81 600 |

# Crimping Pliers

97
2

- for cutting cables, stripping wire and crimping insulated and non-insulated terminals, connectors and plug-type connectors
- with threaded holes for cutting copper and brass screws threaded 7/64", 1/8", 9/64", 5/32" and 13/64" (M2.6, M3, M3.5, M4 and M5)
- bolted joint for higher stability and smooth movement
- special steel; high-strength

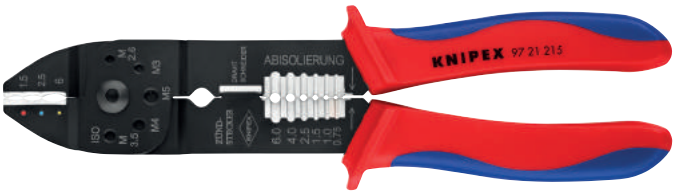


**97 21 215**



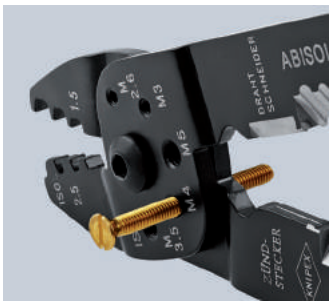

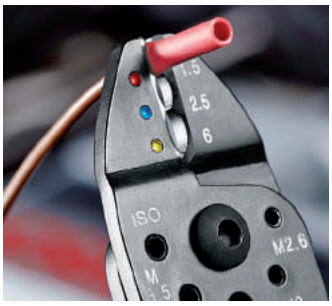


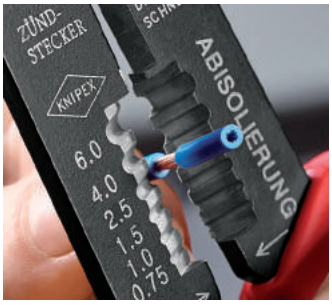


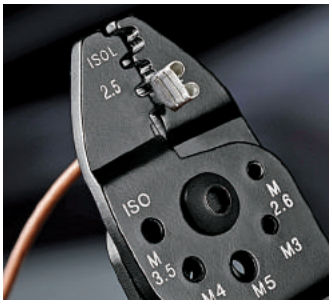


| Product Number | Packaging | ↔ Inch mm | | | Pliers | Handles | Applications | Capacity mm² | Number of crimping positions | ⚖ lbs |
|---|---|---|---|---|---|---|---|---|---|---|
| **97 21 215** | | 9 1/4 235 |  | | black lacquered | multi-component grips | Insulated terminals + cable connectors | 0.75 - 6.0 | 3 | 0.63 |
| **97 21 215 B** | | 9 230 |  | | black lacquered | multi-component grips | Non-insulated open plug-type connectors (plug width 6.3 mm) | 0.5 - 2.5 | 3 | 0.63 |
| **97 21 215 C** | | 9 230 |  | | black lacquered | multi-component grips | Non-insulated terminals + cable connectors | 0.5 - 6.0 | 3 | 0.63 |
| **97 21 215 SB** | X | 9 1/4 235 |  | | black lacquered | multi-component grips | Insulated terminals + cable connectors | 0.75 - 6.0 | 3 | 0.63 |
| **97 22 240** | | 9 1/2 240 |  | | black lacquered | multi-component grips | Insulated terminals + cable connectors | 0.75 - 6.0 | 3 | 0.67 |
| | | |  | | | | Non-insulated open plug-type connectors (plug width 6.3 mm) | 0.5 - 2.5 | | |


1.5
2.5
6
ISO
M2.6
M3
M
3.5
M4
M5
ZÜND-
STECKER
KNIPEX
DRAHT
SCHNEIDER
ABISOLIERUNG
6.0
4.0
2.5
1.5
1.0
0.75

# KNIPEX MultiCrimp®
Crimping Pliers with quick changer magazine

**97 33**

- just one tool for the most common crimping applications
- crimping dies change quickly and easily without any additional tool
- secure and protected storage of the interchangeable dies in a round magazine
- comfortable, powerful crimping pliers
- same reliable crimping results as with fixed crimping dies
- repetitive, high crimping quality due to precision dies and integral lock (self-releasing mechanism)
- chrome vanadium electric steel in special quality; oil-hardened
- round magazine: plastic, fiberglass-reinforced



1. Changing position: service lever opens out for parallel jaw positioning



2. Changing the crimp die: unlock the magazine position, take the crimp dies out of the pliers



3. Fold in the service lever and press the pliers – ready for use again



**97 33 01**



**97 33 01**
Crimping Pliers with round magazine and three interchangeable crimping dies for:

- non-insulated open plug-type connectors (4.8 + 6.3 mm width) from 1/64-15/64" (0.5 - 6.0 mm²)
- insulated terminals, plug connectors and butt connectors from 1/64-15/64" (0.5 - 6.0 mm²)
- insulated and non-insulated ferrules (end sleeves) from 1/64-15/64" (0.25 - 6 mm²)

Now also for insulated and non-insulated end sleeves (ferrules) 10, 16, 25 mm²
Universal indent crimping die for non-insulated connectors

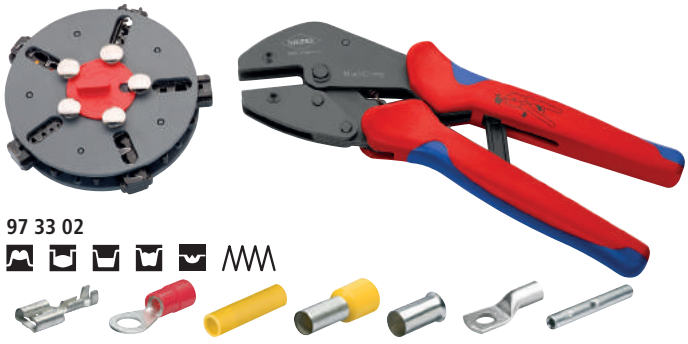

**97 33 02**



**97 33 02**
Crimping Pliers with round magazine and five interchangeable dies for;

- non-insulated open plug-type connectors (plug width 4.8 + 6.3 mm) from 1/64-15/64" (0.5 - 6.0 mm²)
- insulated terminals, plug connectors and butt connectors from 1/64-15/64" (0.5 - 6.0 mm²)
- - insulated and non-insulated ferrules (end sleeves) from 1/64-15/64" (0.25 - 6 mm²)
- insulated and non-insulated ferrules (end sleeves) with 10 / 16 / 25 mm² and for non-insulated crimp terminals
- tube and compression cable lugs in accordance with DIN 46234 and DIN 46235
- non-insulated crimp, butt and press connectors in accordance with DIN 46341 and DIN 46267

Compact and lightweight crimping pliers for connectors.
One tool does the job of five.





Magazine for crimp dies can be carried on a belt



Clearly visible marking on the crimping dies with pictograms

**WARNING:** This product can expose you to chemicals including Diisononyl Phthalate, which is known to the State of California to cause cancer. For more information go to

| Product Number | Packaging | ↔ Inch mm | | | | Applications | Capacity mm² | ⚖ lbs |
|---|---|---|---|---|---|---|---|---|
| **97 33 01** | | 10<br>250 |  | | | Non-insulated open plug-type connectors (plug width 4.8 + 6.3 mm) | 0.5 - 6.0 | 1.33 |
| | | - |  | | | Insulated terminals, plug connectors and butt connectors | 0.5 - 6.0 | - |
| | | - |  | | | Insulated and non-insulated end sleeves (ferrules) | 0.25 - 0.75 / 1 - 1.5 / 2.5 / 4 / 6 | - |
| **97 33 02** | | 10<br>250 |  | | | Non-insulated open plug-type connectors (plug width 4.8 + 6.3 mm) | 0.5 - 6.0 | 1.92 |
| | | - |  | | | Insulated terminals. plug connectors and butt connectors | 0.5 - 6.0 | - |
| | | - |  | | | Insulated and non-insulated end sleeves (ferrules) | 0.25 - 0.75 / 1 - 1.5 / 2.5 / 4 / 6 | - |
| | | - |  | | | Insulated and non-insulated end sleeves (ferrules) | 10 / 16 / 25 | - |
| | | - |  | | | Non-insulated crimp terminals, tube and compression cable lugs in accordance with DIN 46234 and DIN 46235 and non-insulated crimp, butt and press connectors in accordance with DIN 46341 and DIN 46267 | 0.5 - 10.0 | - |

# Crimp System Pliers
for exchangeable crimping dies

**97 43**

- just one tool for almost 1,000 crimping applications
- parallel crimping die movement
- repetitive, high crimping quality due to precision dies and integral lock (self-releasing mechanism)
- crimping pressure has been set precisely (calibrated) in the factory
- optimum transmission of force due to lever action for fatigue-reduced operation
- comfortable handle design
- different locators for precise positioning of the connectors
- additional crimp dies available upon request
- chrome vanadium electric steel in special quality; oil-hardened



**97 43 200**



97 43 200 with crimping dies 97 49 06 for insulated terminals, plug connectors and butt connectors

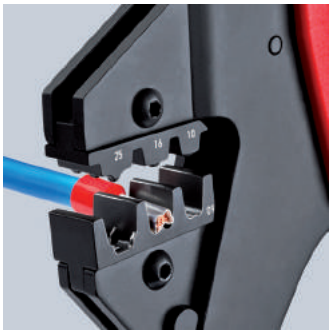

97 43 200 with crimping dies 97 49 09 for ferrules (end sleeves)




**97 43 200 A**

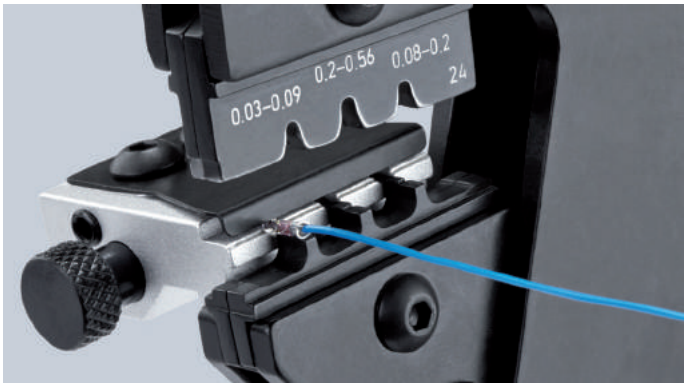


97 43 400 Crimp System Pliers with crimp dies 97 49 24 and locator 97 49 93 for D-Sub plugs

**97 43 200**
In a plastic case; foam insert with recesses for crimping dies and locators; with service tool (hexagonal key), screws and nuts; without crimping dies

**97 43 200 A**
Pliers without crimping dies, without case

**97 43 05**
With attached crimping dies for non-insulated open plug-type connectors (4.8 and 6.3 mm connector width)

**97 43 06**
With attached crimping dies for insulated terminals and plug connectors

**WARNING:** This product can expose you to chemicals including Diisononyl Phthalate, which is known to the State of California to cause cancer. For more information go to

| Product Number | Packaging | ↔ Inch mm | | | Pliers | Handles | Applications | Capacity mm² | Number of crimping positions | lbs |
|---|---|---|---|---|---|---|---|---|---|---|
| **97 43 05** | | 8 200 | | | burnished | multi-component grips | Crimp System Pliers for non-insulated open plug-type connectors (4.8 and 6.3 mm connector width) | 0.5 - 6.0 | 3 | 1.33 |
| **97 43 06** | | 8 200 | | | burnished | multi-component grips | Crimp System Pliers for insulated terminals and plug connectors | 0.5 - 6.0 | 3 | 1.35 |
| **97 43 200** | | 8 200 | - | | burnished | multi-component grips | See crimp die profile table | - | - | 1.25 |
| **97 43 200 A** | | 8 200 | - | | burnished | multi-component grips | See crimp die profile table | - | - | 1.26 |

| Product Number | Packaging | | | Applications | Cable type | Capacity mm² | Capacity SW mm<br>Inch<br>mm | Sleeves<br>Ø Inch<br>Ø mm | Number of crimping positions | ⚖ lbs |
|---|---|---|---|---|---|---|---|---|---|---|
| **97 49 04** | |  | | Non-insulated open plug-type connectors (plug width 2.8 + 4.8 mm) | - | 0.1 - 2.5 | - | - | 4 | 0.09 |
| **97 49 05** | |  | | Non-insulated open plug-type connectors (plug width 4.8 + 6.3 mm) | - | 0.5 - 6.0 | - | - | 3 | 0.10 |
| **97 49 06** | |  | | Insulated terminals, plug connectors + butt connectors | - | 0.5 - 6.0 | - | - | 3 | 0.10 |
| **97 49 08** | |  | | Insulated and non-insulated ferrules (end sleeves) | - | 0.25 - 6.0 | - | - | 5 | 0.11 |
| **97 49 09** | |  | | Insulated and non-insulated ferrules (end sleeves) | - | 10 / 16 / 25 | - | - | 3 | 0.11 |
| **97 49 15** | |  | | Lug connectors and non-insulated open plug-type connectors (plug width 6.3 mm) | - | 1.25-2.5 + 3.0-6.0 | - | - | 2 + 1 | 0.12 |
| **97 49 16** | |  | | Insulated terminals + cable connectors | - | 10.0 - 16.0 | - | - | 2 | 0.10 |
| **97 49 18** | |  | | Twin ferrules (end sleeves) for two flexible conductors | - | 2x6 / 2x10 / 2x16 | - | - | 3 | 0.11 |
| **97 49 19** | |  | | Insulated and non-insulated ferrules (end sleeves) | - | 35 - 50 | - | - | 2 | 0.10 |
| **97 49 20** | |  | | F-connectors for TV and satellite connections | - | - | 9/32; 21/64; 5/16<br>7.0; 8.4; 8.1 | 19/64; 3/8; 3/8<br>7.7; 9.5; 9.5 | 3 | 0.11 |
| **97 49 23** | |  | | Non-insulated terminals + cable connections | - | 16 + 25 | - | - | 2 | 0.10 |
| **97 49 24** | |  | | D Sub; HD 20; HDE plug | - | 0.03 - 0.56 | - | - | 3 | 0.09 |
| **97 49 30** | |  | | Non-insulated crimp connectors in accordance with DIN 46267 | - | 1.5 - 4.0 | - | - | 3 | 0.08 |
| **97 49 35** | |  | | Spark plug connectors and distributors | - | 1 | - | - | 5 | 0.12 |
| **97 49 40** | |  | | Coax connectors RG 58, 59, 62, 71, 223 | RG 58, 59, 62, 71, 223 | -- | 7/32; 1/4; 1/16<br>5.4; 6.48; 1.72 | 1/4; 19/64; 5/64<br>6.4; 7.6; 2.1 | 3 | 0.13 |
| **97 49 44** | |  | | Rolled contacts | - | 0.14 - 1.5 | - | - | 3 | 0.10 |

| Product Number | Packaging | | | Applications | Cable type | Capacity mm² | Capacity SW mm<br>Inch<br>mm | Sleeves<br>Ø Inch<br>Ø mm | Number of crimping positions | lbs |
|---|---|---|---|---|---|---|---|---|---|---|
| **97 49 50** | |  | | Coax connectors/ car phone RG 58, 74, 188, 316 | RG 58, 174, 188, 316 | - | 1/8; 11/64; 7/32; 1/16; 3/64; 1/32<br>3.25; 4.52; 5.4; 1.72; 1.07; 0.72 | 5/32; 7/32; 1/4; 5/64; 3/64; 1/32<br>3.9; 5.4; 6.4; 2.1; 1.3; 0.95 | 6 | 0.11 |
| **97 49 54** | |  | | Modular plugs | - | 0.5 - 2.5 | - | - | 4 | 0.11 |
| **97 49 60** | |  | | Turned contacts (HTS + Harting) | - | 0.14 - 4.0 | - | - | 4 | 0.12 |
| **97 49 62** | |  | | Solar connectors (Huber + Suhner) | - | 2.5 + 4.0 | - | - | 3 | 0.09 |
| **97 49 64** | |  | | ABS connectors in motor vehicles | - | 1.0 - 6.0 | - | - | 2 | 0.11 |
| **97 49 69 1** | |  | | Solar cable connectors gesis® solar PST 40 (Wieland) | - | 1.5 - 2.5 | - | - | 2 | 0.10 |
| **97 49 69 2** | |  | | Solar cable connectors gesis® solar PST 40 (Wieland) | - | 4.0 - 10.0 | - | - | 3 | 0.10 |
| **97 49 70** | |  | | Western plugs | - | 4,6,8-poles RJ 10 / 11 / 12 / 45 | - | - | 3 | 0.11 |
| **97 49 74** | |  | | Unshielded plugs | - | 4,6,8-poles RJ 10 / 11 / 12 / 45 | - | - | 3 | 0.10 |
| **97 49 76** | |  | | Shielded Stewart plugs | - | - | - | - | 2 | 0.11 |
| **97 49 81** | |  | | Fiber optic connectors, e.g. Harting | - | - | 1/8; 3/16; 1/4<br>3.0; 4.95; 6.5 | 9/64; 15/64; 19/64<br>3.5; 6.0; 7.5 | 3 | 0.12 |
| **97 49 82** | |  | | Fiber optic connectors, e.g. Telegärtner | - | - | 1/8; 9/64; 11/64<br>3.25; 3.65; 4.52 | 9/64; 5/32; 7/32<br>3.6; 4.0; 5.4 | 3 | 0.11 |
| **97 49 83** | |  | | Fiber optic connectors, e.g. FSMA-;ST-; SC- + STSC-/K-connectors | - | - | 9/64; 11/64; 13/64<br>3.65; 4.2; 5.0 | 11/64; 7/32; 15/64<br>4.3; 5.4; 6.0 | 3 | 0.11 |
| **97 49 84** | |  | | Fiber optic connectors, e.g. Huber/Suhner | - | - | 5/32; 11/64; 3/16<br>3.8; 4.3; 4.95 | 11/16; 13/64; 15/64<br>4.5; 5.2; 6.0 | 3 | 0.11 |
| **97 49 87** | |  | | Fiber optic connectors, e.g. FSMA-;ST- and MIC-connectors | - | - | 11/32<br>8.7 | 3/8<br>9.5 | 1 | 0.10 |

| | |
|---|---|
| **97 49 90** | Locator for 97 49 60 (HTS+Harting) |
| **97 49 93** | Locator for 97 49 24 (D-Sub-plugs) |
| **97 49 94** | Locator for 97 49 04 |
| **97 49 95** | Locator for 97 49 05 |

Special profiles available upon request

# Locators
for crimping pliers and profiles

97

**97 59 65 2**
Locator that is universally adjustable (in length and diameter) for the repeatable exact alignment of turned contacts in crimping pliers; can be set to all commercially available turned contacts in the four-mandrel crimping pliers' capacity range.



Locator 97 59 65 2 for four-mandrel crimping pliers, adjustable in length and diameter for various plugs



**97 59 65 2**

| Product Number | Packaging | Applications | ⚖ lbs |
|---|---|---|---|
| **97 49 65 1** | | Locator for 97 49 65 (solar connectors MC 3) | 0.19 |
| **97 49 66 1** | | Locator for 97 49 66 (solar connectors MC 4) | 0.16 |
| **97 49 68 1** | | Locator for 97 49 68 (solar connectors Solarlok) | 0.16 |
| **97 59 65 2** | | Universal Locator for 97 52 65 / 97 52 65 DG | 0.35 |

# Crimping Pliers
with side cutter for Scotchlok™ connectors

97
50

- for crimping plastic-insulated telecommunication or signal cables using the U-contact principle in single Scotchlok connectors
- no stripping necessary, U-shaped elements make the connection
- induction hardened cutting edges
- includes opening spring for easy repetitive work
- vanadium electric steel; forged, oil-hardened




**97 50 01**

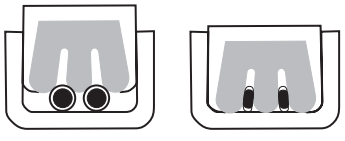

Before After

Scotchlok™ is a registered trademark for 3M

| Product Number | Packaging | ↔ Inch mm | Type of Connector | | Head | Handles | Applications | Capacity Ø Inch Ø mm | ⚖ lbs |
|---|---|---|---|---|---|---|---|---|---|
| **97 50 01** | | 6 1/8 155 | | | polished | plastic coated | Scotchlok single connector | 1/64 - 3/64 0.4 - 1.1 | 0.31 |

# Crimping Pliers for Western plugs

97
51

- professional tool for cutting and stripping unshielded ribbon telephone cables
- for crimping 6- and 8-pole Western plugs type RJ 11/12 (3/8" / 9.65 mm width) and type RJ 45 (15/32" / 11.68 mm width)
- exact crimping process due to parallel crimping
- repetitive, high crimping quality due to integral lock (self-releasing mechanism)
- length cutter and dismantling knife for ribbon cables 1/4" and 1/2" (6 and 12 mm) length
- additional stripping device for round cables
- chrome vanadium electric steel in special quality; oil-hardened
- 97 51 12 is for crimping 4-, 6- and 8-pole Western plugs type RJ 10 (7.65 mm width), type RJ 11/12 (9.65 mm width) and type RJ 45 (11.68 mm width)




**97 51 10**






**97 51 12**












| Product Number | Packaging | ↔ Inch mm | Type of Connector | | Pliers | Handles | Capacity | Number of crimping positions | ⚖ lbs |
|---|---|---|---|---|---|---|---|---|---|
| **97 51 10** | | 7 1/2<br>190 |  |  | burnished | multi-component grips | RJ 11/12 (6-poles) 3/8" (9.65 mm)<br>RJ 45 (8-poles) 15/32" (11.68 mm) | 2 | 0.67 |
| **97 51 12** | | 8<br>200 |  |  | burnished | multi-component grips | RJ 10 (4-poles) 7.65 mm<br>RJ 11/12 (6-poles) 3/8" (9.65 mm)<br>RJ 45 (8-poles) 15/32" (11.68 mm) | 3 | 1.18 |

| | |
|---|---|
| **97 59 06** | 4 spare blades for 97 51 10 |
| **97 59 12** | Spare set of blades for 97 51 12 |

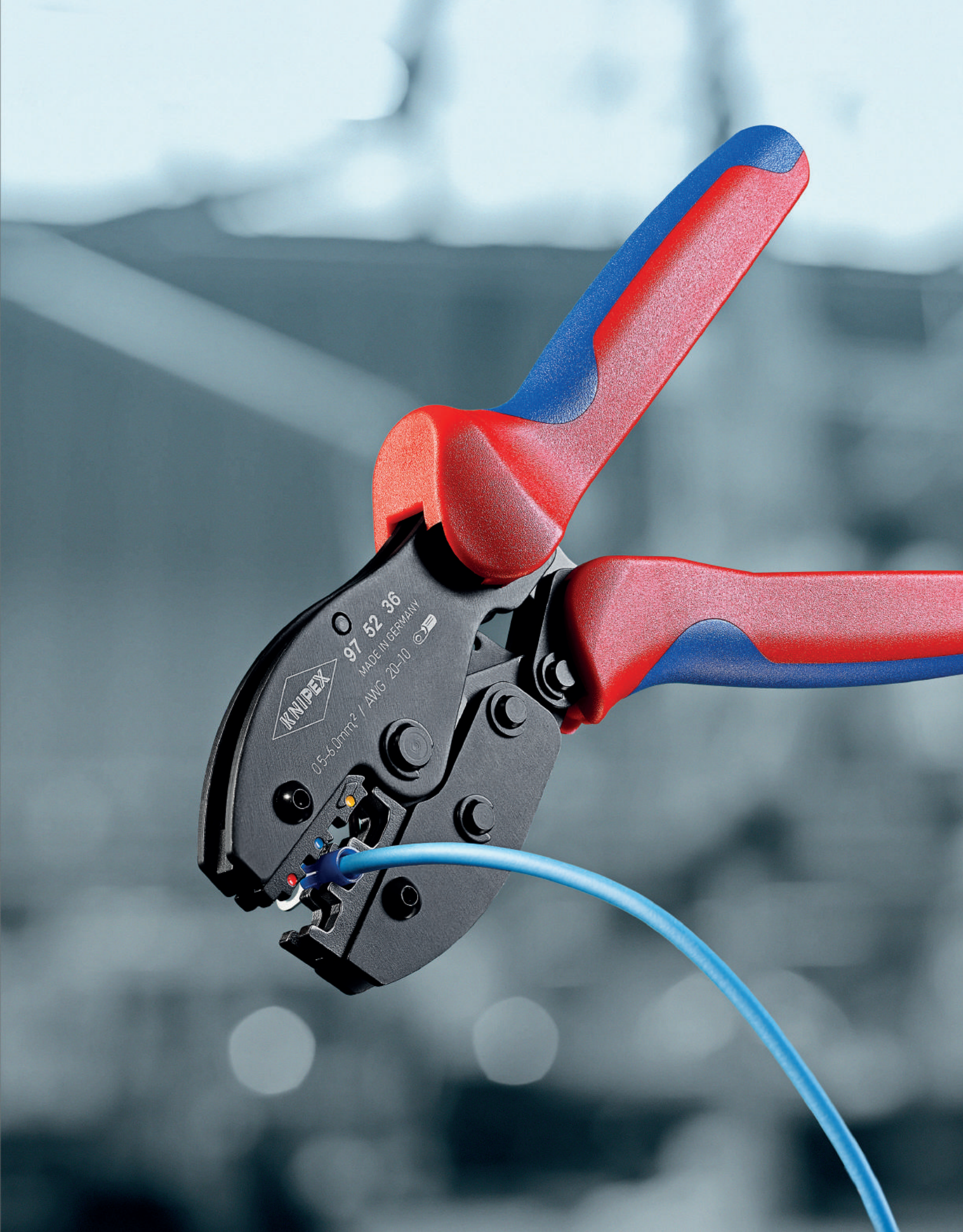
KNIPEX
97 52 36
MADE IN GERMANY
0,5–6,0mm² / AWG 20–10

# Crimping Pliers
for two-handed operation

**97 52**

- for solder-free electrical connections
- the lever transmission reduces the handforce up to 30% compared with regular crimping pliers
- repetitive, high crimping quality due to precision dies and integral lock (self-releasing mechanism)
- crimping pressure has been set precisely (calibrated) in the factory
- two-handed operation for easy crimping of large conductor diameters
- easy handling as a result of well-balanced center of gravity, angled head and ergonomically shaped handles
- chrome vanadium electric steel in special quality; oil-hardened




First step: place the connector into the correct crimping position. Squeeze handles slightly to secure connector inside die




Second step: insert wire into connector and squeeze handles to complete crimp




Third step: handles are long enough for two-handed operation. Handles will release automatically when the crimp is complete




**97 52 04**






**97 52 06**






**97 52 10**



| Product Number | ↔ Inch mm | | | Pliers | Handles | Applications | Capacity mm² | AWG | Number of crimping positions | lbs |
|---|---|---|---|---|---|---|---|---|---|---|
| **97 52 04** | 10<br>250 |  | | burnished | non-slip plastic grips | Non-insulated open plug-type connectors (plug width 2.8 + 4.8 mm) | 0.1 - 2.5 | 26 - 14 | 4 | 1.24 |
| **97 52 05** | 10<br>250 |  | | burnished | non-slip plastic grips | Non-insulated open plug-type connectors (plug width 4.8 + 6.3 mm) | 0.5 - 6.0 | 22 - 8 | 3 | 1.26 |
| **97 52 06** | 10<br>250 |  | | burnished | non-slip plastic grips | Insulated terminals. plug connectors + butt connectors | 0.5 - 6.0 | 22 - 8 | 3 | 1.25 |
| **97 52 08** | 10<br>250 |  | | burnished | non-slip plastic grips | Insulated and non-insulated ferrules (end sleeves) | 0.25 - 6.0 | 24 - 8 | 5 | 1.25 |
| **97 52 09** | 10<br>250 |  | | burnished | non-slip plastic grips | Insulated and non-insulated ferrules (end sleeves) | 10 / 16 / 25 | 8 / 6 / 4 | 3 | 1.26 |
| **97 52 10** | 10<br>250 |  | | burnished | non-slip plastic grips | COAX-. BNC- and TNC-connectors | - | - | 3 | 1.27 |
| **97 52 13** | 10<br>250 |  | | burnished | non-slip plastic grips | Non-insulated crimp terminals, tube and compression cable lugs in accordance with DIN 46234 and DIN 46235 and non-insulated crimp, butt and press connectors in accordance with DIN 46341 and DIN 46267 | 0.5 - 10.0 | 22 - 8 | 4 | 1.23 |
| **97 52 19** | 10<br>250 |  | | burnished | non-slip plastic grips | Insulated and non-insulated ferrules (end sleeves) | 35 - 50 | 2 and 0 (1/0) | 2 | 1.25 |
| **97 52 23** | 10<br>250 |  | | burnished | non-slip plastic grips | Non-insulated terminals + cable connectors | 16 + 25 | 6 and 4 | 2 | 1.25 |

## Crimping Pliers
with short design

**97 52**

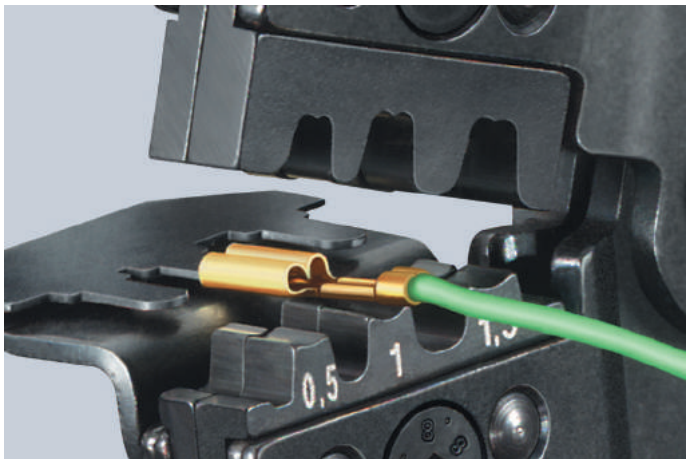


**97 59 14**
> Locator for non-insulated open plug-type connectors

- repetitive, high crimping quality due to precision dies and integral lock (self-releasing mechanism)
- crimping pressure has been set precisely (calibrated) in the factory
- optimum transmission of force due to toggle lever for fatigue-reduced operation
- 20° angled head, lightweight and compact design
- chrome vanadium electric steel in special quality; oil-hardened




**97 52 14**

**WARNING:** This product can expose you to chemicals including Diisononyl Phthalate, which is known to the State of California to cause cancer. For more information go to

| Product Number | Packaging | ↔ Inch mm | | | Pliers | Handles | Applications | Capacity mm² | AWG | Number of crimping positions | lbs |
|---|---|---|---|---|---|---|---|---|---|---|---|
| **97 52 14** | | 7 1/2<br>195 |  | | burnished | multi-component grips | Non-insulated open plug- type con-nectors (plug width 2.8 + 4.8 mm) | 0.10 - 1.5 | 26 - 16 | 4 | 0.85 |
| **97 52 20** | | 7 1/2<br>195 |  | | burnished | multi-component grips | COAX-, BNC- and TNC-connectors RG 58/59/62/71/223 | - | - | 3 | 0.84 |

| | |
|---|---|
| **97 59 14** | Locator for 97 52 14 short design |

# PreciForce®

- repetitive, high crimping quality due to precision dies and integral lock (self-releasing mechanism)
- crimping pressure has been set precisely (calibrated) in the factory
- optimum transmission of force due to toggle lever for fatigue-reduced operation
- good handling due to favorable handle position, low weight, short design and ergonomically shaped handles
- chrome vanadium electric steel in special quality; oil-hardened

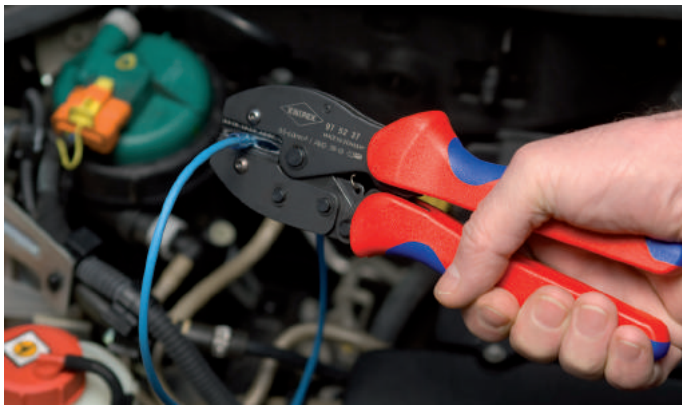

97 52 37



97 52 30



97 52 33



97 52 34



97 52 36



97 52 38

**WARNING:** This product can expose you to chemicals including Diisononyl Phthalate, which is known to the State of California to cause cancer. For more information go to

| Product Number | ↔ Inch mm | | | Pliers | Handles | Applications | Capacity mm² | AWG | Number of crimping positions | lbs |
|---|---|---|---|---|---|---|---|---|---|---|
| **97 52 30** | 8 3/4 220 |  | | burnished | multi-component grips | Non-insulated crimp connectors in accordance with DIN 46267 | 1.5 - 4.0 | 16 - 12 | 3 | 1.06 |
| **97 52 33** | 8 3/4 220 |  | | burnished | multi-component grips | Non-insulated crimp terminals, tube and compression cable lugs in accordance with DIN 46234 and DIN 46235 and non-insulated crimp, butt and press connectors in accordance with DIN 46341 and DIN 46267 | 0.5 - 10.0 | 22 - 8 | 4 | 1.06 |
| **97 52 34** | 8 3/4 220 |  | | burnished | multi-component grips | Non-insulated open plug-type connectors (plug width 2.8 + 4.8 mm) | 0.1 - 2.5 | 26 - 14 | 4 | 1.07 |
| **97 52 35** | 8 3/4 220 |  | | burnished | multi-component grips | Non-insulated open plug-type connectors (plug width 4.8 + 6.3 mm) | 0.5 - 6.0 | 22 - 10 | 3 | 1.08 |
| **97 52 36** | 8 3/4 220 |  | | burnished | multi-component grips | Insulated terminals, plug connectors + butt connectors | 0.5 - 6.0 | 22 - 10 | 3 | 1.08 |
| **97 52 37** | 8 3/4 220 |  | | burnished | multi-component grips | Heat shrinkable sleeve connectors | 0.5 - 6.0 | 22 - 10 | 3 | 1.05 |
| **97 52 38** | 8 3/4 220 |  | | burnished | multi-component grips | Insulated and non-insulated ferrules (end sleeves) | 0.25 - 6.0 | 24 - 10 | 5 | 1.09 |
| **97 52 50** | 8 3/4 220 |  | | burnished | multi-component grips | COAX-, BNC- and TNC-connectors for RG 58/174/188/316 | - | - | 6 | 1.10 |

# Four-Mandrel Crimping Pliers
for turned contacts

97
52

- for crimping turned contacts
- four-mandrel crimping for top-quality crimping connections
- mandrel gauge to check the basic setting
- repetitive, high crimping quality due to integral lock (self-releasing mechanism)
- optimum transmission of force due to highly effective lever action for fatigue-reduced operation
- high operation comfort due to ergonomic shape
- chrome vanadium electric steel in special quality; oil-hardened

**97 52 63 DG**
Crimping capacity can be adjusted in increments of .0004" (0.01 mm); with digital display of the preset crimping capacities; adjustment in mm, inches or comparable selection positions according to MIL; packaged in a plastic case with foam insert and locator for holding the contacts

**97 52 64**
Pressure adjustment depending on the conductor´s diameter by means of adjusting wheel in 4 different positions; locator for positioning the contacts

**97 52 65**
Fine adjustment of pressure depending on the conductor´s diameter by means of adjusting wheel; locator for positioning the contacts; with table for calculating the settings; pliers in a plastic case with foam insert

**97 52 65 DG**
Crimping capacity can be adjusted in increments of .0004" (0.01 mm); with digital display of the preset crimping capacities; adjustment in mm, inches or comparable selection positions according to MIL; with table for calculating the settings; packaged in a plastic case with foam insert and locator for holding the contacts

Turned contacts are used for particularly demanding plug-type connections, e.g. in medical industry and aviation. Extremely reliable crimping connections can be achieved only with pliers that work with absolute precision and maintain the required crimping depth in the 1/100 mm range. KNIPEX has all of the tools you need to get these jobs done.



**97 59 65 2**
Universal Locator



**97 52 63 DG**
PATENTED





**97 52 64**





**97 52 65**
PATENTED





**97 52 65 DG**
PATENTED






Standard locator










Multifunctional digital indication, adjustment in mm, inches or comparable selection positions according to MIL



**WARNING:** This product can expose you to chemicals including Diisononyl Phthalate, which is known to the State of California to cause cancer. For more information go to

| Product Number | Packaging | ↔ Inch mm | | | Pliers | Handles | Applications | Capacity mm² | AWG | ⚖ lbs |
|---|---|---|---|---|---|---|---|---|---|---|
| **97 52 63 DG** | X | 7 1/2 195 | | PATENTED | chrome plated | multi-component grips | Turned contacts | 0.08 - 2.5 | 28 - 13 | 1.89 |
| **97 52 64** | X | 7 1/4 180 | | | chrome plated | multi-component grips | Turned contacts | 0.08 - 2.5 | 28 - 13 | 0.94 |
| **97 52 65** | X | 9 1/4 235 | | PATENTED | chrome plated | multi-component grips | Turned contacts (Harting; Ilme; Phoenix; Amphenol; Walther; HTS; Contact; Weidmüller) | 0.14 - 6.0 | 25 - 10 | 1.5 |
| **97 52 65 DG** | X | 10 250 | | PATENTED | chrome plated | multi-component grips | Turned contacts (Harting; Ilme; Phoenix; Amphenol; Walther; HTS; Contact; Weidmüller) | 0.14 - 6.0 | 25 - 10 | 2.8 |

| | |
|---|---|
| **97 59 65 2** | Universal Locator for 97 52 65 / 97 52 65 DG |

# Self-Adjusting Crimping Pliers
with side-loading mechanism for ferrules (end sleeves)

**97 53**

## Narrow handle width and improved ergonomics

- for crimping ferrules (end sleeves) according to DIN 46228 parts 1 + 4
- self-adjustment to the size of ferrules (end sleeves) required
- repetitive, high crimping quality due to integral lock (self-releasing mechanism)
- crimping pressure has been set precisely (calibrated) in the factory
- optimum transmission of force due to toggle lever for fatigue-reduced operation
- high operation comfort due to hand shape and low weight
- chrome vanadium electric steel in special quality; oil-hardened




**97 53 04**



**97 53 04**
Square compression for ferrules (end sleeves) up to 6 AWG; square compression for ideal contact surfaces in the clamp connection; particularly suitable for all twin ferrules (end sleeves) up to 2 x 6 mm² or 2 x AWG 8




**97 53 14**



**97 53 14**
Expanded capacity of hexagonal crimping up to 1 AWG; hexagonal compression for confined connection dimensions; particularly suitable for all twin ferrules (end sleeves) up to 2 x 4 mm² or 2 x AWG 10





Crimping capacity can be switched over simply from 8 AWG (10 mm²) to 6 AWG (16 mm²)

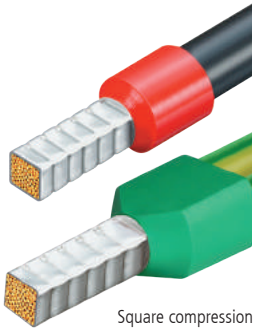

Square compression

The small crimping pliers for ferrules (end sleeves) with two major advantages for the user:
- Automatic adjustment to the end sleeves, making work easier for the professional and offers reliable and fast crimping
- Expanded range of applications

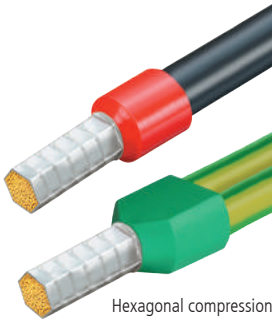

Hexagonal compression

⚠ **WARNING:** This product can expose you to chemicals including Diisononyl Phthalate, which is known to the State of California to cause cancer. For more information go to

| Product Number | Packaging | ↔ Inch mm | | | Pliers | Handles | Applications | Capacity mm² | AWG | Number of crimping positions | lbs |
|---|---|---|---|---|---|---|---|---|---|---|---|
| **97 53 04** | | 7 1/4 180 |  | | burnished | multi-component grips | Ferrules (end sleeves) | 0.08 - 10 and 16 | 28 - 8 and 6 | 1 | 0.94 |
| **97 53 14** | | 7 1/4 180 |  | | burnished | multi-component grips | Ferrules (end sleeves) | 0.08 - 10.0 | 28 - 8 | 1 | 0.90 |

# KNIPEX Twistor16

Self-adjusting crimping pliers for end sleeves (ferrules) with rotating crimp head

**97 53**

## Crimp head can be freely rotated 360°, with 8 locking positions

## Square crimp profile, high capacity range of 26 to 6 AWG (0.14 to 16 mm²)

## End sleeves (ferrules) can be crimped from almost any working position

- crimping pliers adjust automatically to different diameters
- crimp opening is accessible from both sides, extra-long end sleeves can be fed in
- crimping of twin end sleeves (ferrules) up to 2 x 6 mm² possible
- repetitive, high crimping quality due to integral lock (self-releasing mechanism)
- light and handy tool, manual force reinforced by toggle lever mechanism
- chrome vanadium electric steel in special quality; oil-hardened




**97 53 18**

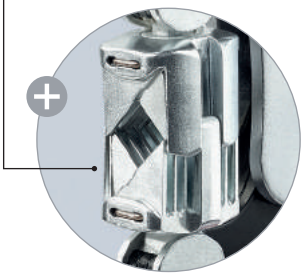

Crimp head can be rotated 360°

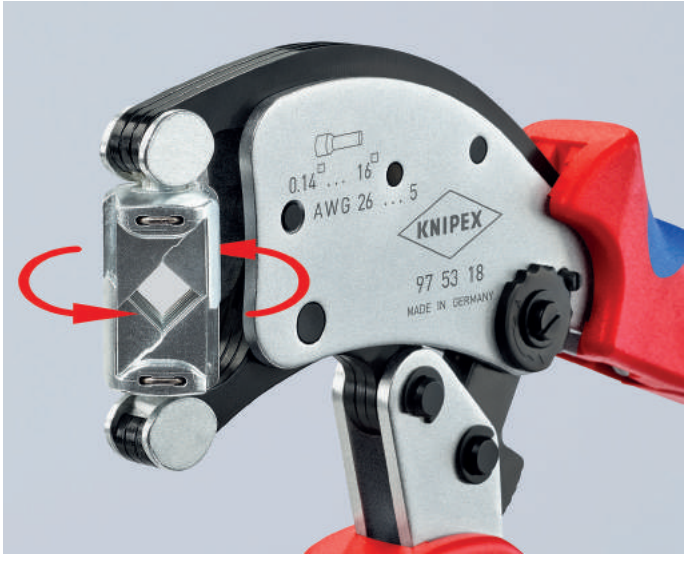


Crimp head can be rotated 360° for optimal accessibility, even in confined spaces

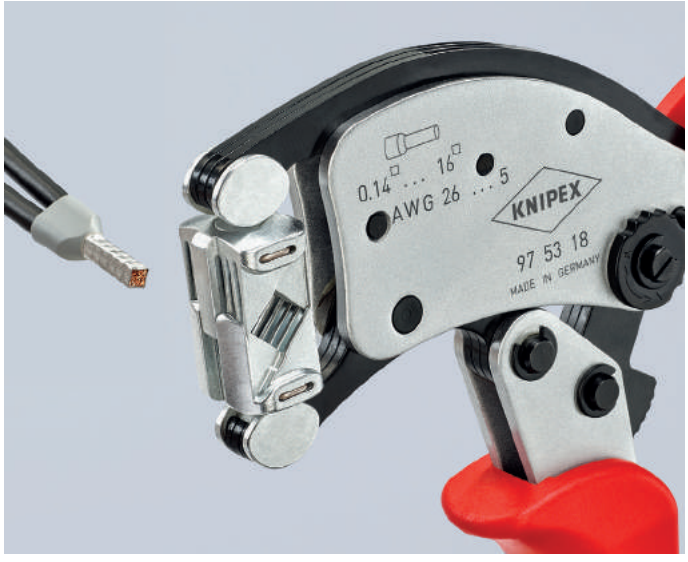


Twin end sleeves (ferrules) up to 2 x 6 mm² can be crimped without adjustment

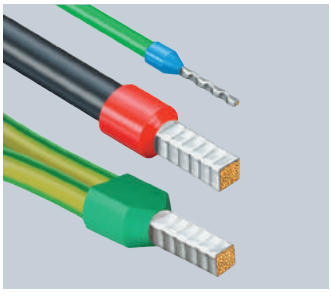

Crimp end sleeves (ferrules) fully automatically within the capacity range of 26 to 6 AWG (0.14 to 16 mm)



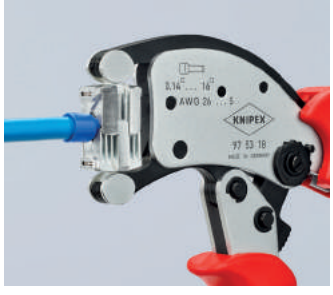



Uniquely flexible: connectors can be inserted in the rotatable crimp head from almost any position

| Product Number | Packaging | ↔ Inch / mm | Capacity mm² | AWG | Number of crimping positions | ⚖ lbs |
|---|---|---|---|---|---|---|
| **97 53 18** | | 8 / 200 | 0.14 - 16 | 26 - 6 | 1 | 1.05 |

# Self-adjusting Crimping Pliers
with front loading mechanism for ferrules (end sleeves)

**97 53**

- for crimping ferrules (end sleeves) according to DIN 46228 parts 1 + 4
- self-adjusting adaptation to the desired wire ferrule (end sleeves) size: no crimping faults caused by using the wrong die
- front-loading of the ferrules (end sleeves) into the tool
- repetitive, high crimping quality due to integral lock (self-releasing mechanism)
- crimping pressure has been set precisely (calibrated) in the factory
- optimum transmission of force due to toggle lever for fatigue-reduced operation
- high operation comfort due to handle shape and low weight
- chrome vanadium electric steel in special quality; oil-hardened

**97 53 08**
Crimping from 28 - 8 AWG (0.08 - 10.0 mm²) in one profile; wire ferrules (end sleeves) up to 14 AWG (2.5 mm²) can also be loaded parallel from the side; particularly suitable for all twin ferrules (end sleeves) up to 2 x 4 mm² or 2 x AWG 10

**97 53 09**
Crimping from 28 - 8 and 6 AWG (0.08 - 10.0 and 16.0 mm²) in one profile; with selector lever for setting the crimping area either to 28 - 8 and 6 AWG (0.08 - 10 mm² or 16 mm²); particularly suitable for all twin ferrules (end sleeves) up to 2 x 6 mm² or 2 x AWG 8




**97 53 08**




**97 53 09**


Square crimping

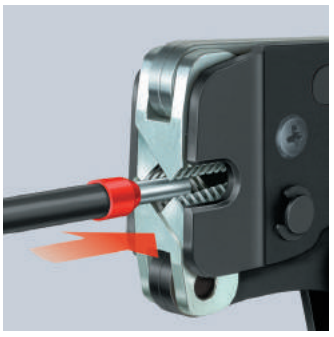
Front-loading of ferrules (end sleeves) e.g. in switchboards

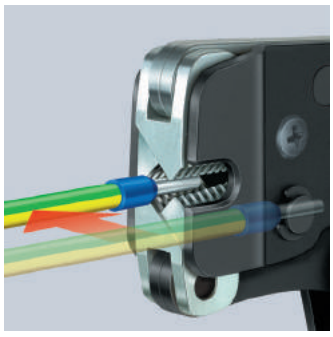
97 53 08: Lateral loading of ferrules (end sleeves) up to 14 AWG (2.5 mm²) parallel from the side e.g. in confined areas

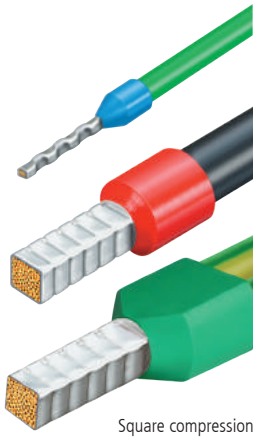
Square compression

The crimping pliers for wire ferrules (end sleeves) with three great advantages for the user:
> Automatic self-adjustment to the wire ferrules (end sleeves): This allowing the professional to work with less strain and enables secure, reliable and quick crimping
> Range of applications for large cross-sections: crimping 28 - 8 and 6 AWG (0.08 to 10.0 + 16.0 mm²)
> Front-loading: very helpful under difficult working conditions in confined spaces

**WARNING:** This product can expose you to chemicals including Diisononyl Phthalate, which is known to the State of California to cause cancer. For more information go to

| Product Number | Packaging | ↔ Inch mm | | | Pliers | Handles | Applications | Capacity mm² | AWG | Number of crimping positions | lbs |
|---|---|---|---|---|---|---|---|---|---|---|---|
| **97 53 08** | X | 7 1/2 190 |  | | burnished | multi-component grips | Ferrules (end sleeves) | 0.08 - 10 | 28 - 8 | 1 | 1.05 |
| **97 53 09** | | 7 1/2 190 |  | | burnished | multi-component grips | Ferrules (end sleeves) | 0.08 - 10 and 16 | 28 - 8 and 6 | 1 | 1.07 |

## Crimping Pliers
for wire ferrules (end sleeves)

**97 6**

- for crimping wire ferrules (end sleeves) according to DIN 46228 parts 1 and 4 in an area of application from 24 - 14 AWG (0.25 up to 2.5 mm²)
- crimping in marked trapezoidal dies for tight connections between the sleeve and the conductor
- vanadium electric steel; forged, oil-hardened



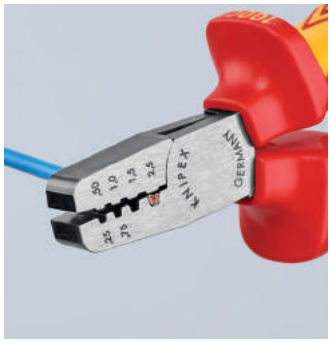




**97 62 145 A**






**97 68 145 A**

1000 V



| Product Number | Packaging | ↔ Inch mm | | | Head | Handles | Capacity mm² | AWG | Number of crimping positions | lbs |
|---|---|---|---|---|---|---|---|---|---|---|
| **97 61 145 A** | | 5 3/4 145 | | | polished | plastic coated | 0.25 - 2.5 | 24 - 14 | 4 | 0.31 |
| **97 61 145 F** | | 5 3/4 145 | | | polished | plastic coated | 0.25 - 2.5 | 24 - 14 | 4 | 0.31 |
| **97 62 145 A** | | 5 3/4 145 | | | polished | multi-component grips | 0.25 - 2.5 | 24 - 14 | 4 | 0.38 |
| **97 68 145 A** | | 5 3/4 145 | | 1000 V | polished | insulated, multi-component grips, VDE-tested | 0.25 - 2.5 | 24 - 14 | 4 | 0.41 |

## Crimping Pliers
for wire ferrules (end sleeves)

**97 7**

Easy crimping due to optimized transmission ratio
Light and slim design

- for crimping wire ferrules (end sleeves) according to DIN 46228 parts 1 and 4 from 5 to 23 AWG (0.25 to 16 mm²)
- crimping in marked half-round dies for secure connections between the sleeve and the conductor
- high-grade special tool steel; forged, oil-hardened








**97 71 180**






**97 72 180**



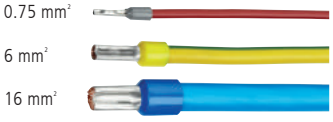


| Product Number | Packaging | ↔ Inch mm | | | Head | Handles | Applications | Capacity mm² | AWG | Number of crimping positions | lbs |
|---|---|---|---|---|---|---|---|---|---|---|---|
| **97 71 180** | | 7 1/4 180 | | | polished | plastic coated | ferrules (end sleeves) | 0.25 - 16.0 | 24 - 6 | 9 | 0.45 |
| **97 72 180** | | 7 1/4 180 | | | polished | multi-component grips | ferrules (end sleeves) | 0.25 - 16.0 | 24 - 6 | 9 | 0.53 |

# Crimping Pliers

with front loading mechanism for wire ferrules (end sleeves)



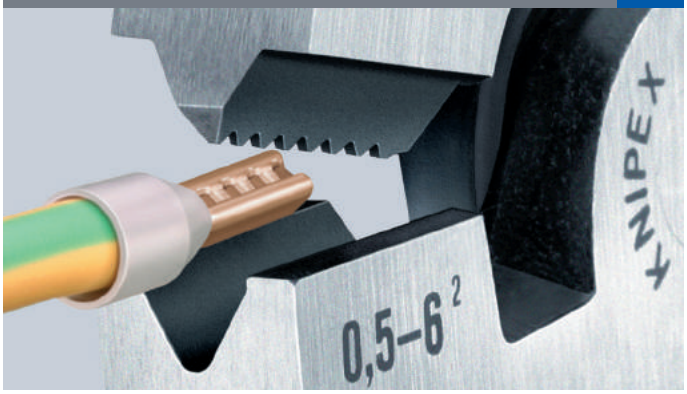


- for crimping ferrules (end sleeves) according to DIN 46228 parts 1 + 4 in the range 0.5 to 6 mm²
- ideal for work in confined areas, e.g. in narrow and deep switch boxes
- special tool steel; forged, oil-hardened




**97 81 180**



| Product Number | Packaging | ↔ Inch mm | | | Head | Handles | Applications | Capacity mm² | AWG | Number of crimping positions | ⚖ lbs |
|---|---|---|---|---|---|---|---|---|---|---|---|
| **97 81 180** | | 7 1/4 180 |  | | polished | plastic coated | ferrules (end sleeves) | 0.5 - 6.0 | 24 - 0 | 1 | 0.45 |



# Crimp Assortments
for ferrules (end sleeves)

**97 90**

- in a TANOS MINI-systainer® (solid plastic box)
- T-Loc fastener for one-hand operation: open or close the systainer® with one turn and connect to a second systainer®
- opening when connected: fast and simple access to content without disconnecting
- two stackable plastic inserts with 6 trays each for connectors
- with an assortment of ferrules (end sleeves) with collar

**97 90 05**
With Crimping Pliers for ferrules 97 71 180

**97 90 06**
With Crimping Pliers for ferrules 97 71 180

**97 90 09**
With Self-Adjusting Crimping Pliers for ferrules (end sleeves) 97 53 04

**97 90 10**
With Self-Adjusting Insulation Strippers 12 40 200; with Self-Adjusting Crimping Pliers for ferrules (end sleeves) 97 53 04

**97 90 12**
With Self-Adjusting Insulation Strippers 12 40 200; with Self-Adjusting Crimping Pliers for ferrules (end sleeves) 97 53 08

**97 90 23**
With Crimping Pliers "PreciForce®" for ferrules (end sleeves) 97 52 38

**97 90 24**
With Self-Adapting Universal Insulation Stripper "Multistrip 10" 12 42 195; with Self Adjusting Crimping Pliers for ferrules (end sleeves) 97 53 08


97 90 05


97 90 06


97 90 09


97 90 10




97 90 12


97 90 23


97 90 24

| Product Number | Packaging | Pliers | | Quantity 200 x mm² | 150 x mm² | 100 x mm² | 75 x mm² | 50 x mm² | 40 x mm² | Units | ⚖ lbs |
|---|---|---|---|---|---|---|---|---|---|---|---|
| **97 90 05** | X | Crimping assortment for ferrules (end sleeves) |  | 0.5 / 0.75 / 1 / 1.5 / 2.5 | 4 / 6 | - | - | 10 / 16 | - | 1 | 2.05 |
| **97 90 06** | X | 97 71 180<br>Crimping Pliers for ferrules (end sleeves) |  | 0.5 / 0.75 / 1 / 1.5 | 2.5 | - | 4 / 6 | 10 | 16 | 1 | 2.21 |
| **97 90 09** | X | 97 53 04<br>Self-Adjusting Crimping Pliers for ferrules (end sleeves) |  | 0.5 / 0.75 / 1 / 1.5 / 2.5 | - | 4 / 6 | - | 10 | - | 1 | 3.13 |
| **97 90 10** | X | 97 53 04<br>Self-Adjusting Insulation Strippers<br>12 40 200<br>Self-Adjusting Crimping Pliers for ferrules (end sleeves) |  | 0.5 / 0.75 / 1 / 1.5 / 2.5 | - | 4 / 6 | - | 10 | - | 1 | 2.98 |
| **97 90 12** | X | 97 53 08<br>Self-Adjusting Insulation Strippers<br>12 40 200<br>Self-Adjusting Crimping Pliers for ferrules (end sleeves) |  | 0.5 / 0.75 / 1 / 1.5 / 2.5 | - | 4 / 6 | - | 10 | - | 1 | 3.15 |
| **97 90 23** | X | 97 52 38<br>Crimping Pliers "PreciForce®" for ferrules (end sleeves) |  | 0.5 / 0.75 / 1 / 1.5 / 2.5 | - | 4 / 6 | - | | - | 1 | 2.70 |
| **97 90 24** | X | 97 53 08<br>Self-Adapting Universal Insulation Stripper "Multistrip 10"<br>12 42 195<br>Self-Adjusting Crimping Pliers for ferrules (end sleeves) |  | 0.5 / 0.75 / 1 / 1.5 / 2.5 | - | 4 / 6 | - | 10 | - | 1 | 2.97 |



Systainer® is a registered trademark of TANOS GmbH

# Tool case
for photovoltaics

97
91

- with tools for photovoltaics
- without crimp dies – for individual equipment – please order separately (see ref. 97 49 ..)
- with service tool (Allen key) for changing crimp dies
- shock-resistant plastic case
- foam insert with recesses for tools, crimp dies and locators
- ext. dimension (W x H x D):
  13 37/64 x 3 5/32 x 11" (345 x 80 x 280 mm)



**97 91 01**

| Product Number | Packaging | | | Description | Units | lbs |
|---|---|---|---|---|---|---|
| **97 91 01** | X | - | - | Tool case for photovoltaics | - | 4.33 |
| | | | 12 12 11 | Precision Insulation Stripper, with shaped blades | 1 | - |
| | | 1000 V | 95 16 165 | Cable Shears | 1 | - |
| | | | 97 43 200 | Crimp System Pliers, for exchangeable crimp profiles | 1 | - |

| | |
|---|---|
| **97 49 62** | Crimp Profile for solar cable connectors (Huber + Suhner) |
| **97 49 63** | Crimp Profile for solar cable connectors (Huber + Suhner) |
| **97 49 65** | Crimp Profile for solar cable connectors MC 3 (Multi-Contact) |
| **97 49 65 1** | Locator for 97 49 65 (solar connectors MC 3) |
| **97 49 66** | Crimp Profile for solar cable connectors MC 4 (Multi-Contact) |
| **97 49 66 1** | Locator for 97 49 66 (solar connectors MC 4) |
| **97 49 67** | Crimp Profile for solar cable connectors SunCon (Hirschmann) |
| **97 49 68** | Crimp Profile for turned solar cable connectors (Tyco) |
| **97 49 68 1** | Locator for 97 49 68 (solar connectors Solarlok) |
| **97 49 69 1** | Crimp Profile for solar cable connectors gesis® solar PST 40 (Wieland) |
| **97 49 69 2** | Crimp Profile for solar cable connectors gesis® solar PST 40 (Wieland) |

## 10 Profiles, 2 crosses, 1 key
## For all common locking systems

- multifunctional key for the actuation of locking systems from the areas of facilities engineering (heating and sanitation, air conditioning, electro technology), gas and water supply and shut-off systems
- 8-arm version: 2, 4-way wheel wrenches connected in a space-saving way using magnets
- reversible bit: slot 3/64 x 9/32" (1.0 x 7 mm) and PH2 cross slot
- key and reversible bit joined by stable stainless steel wire
- quality surface coating
- lightweight-optimized zinc die-cast design

TwinKey®

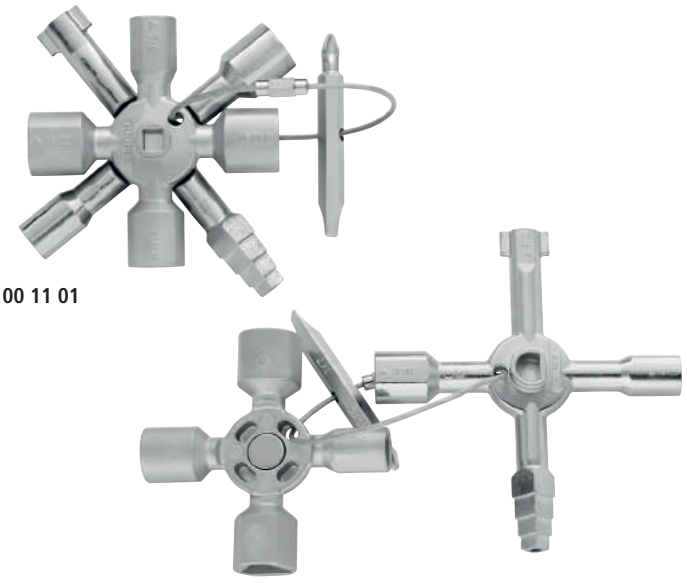

**00 11 01**

⚠ **WARNING:** This product can expose you to chemicals including Nickel, which is known to the State of California to cause cancer. For more information go to



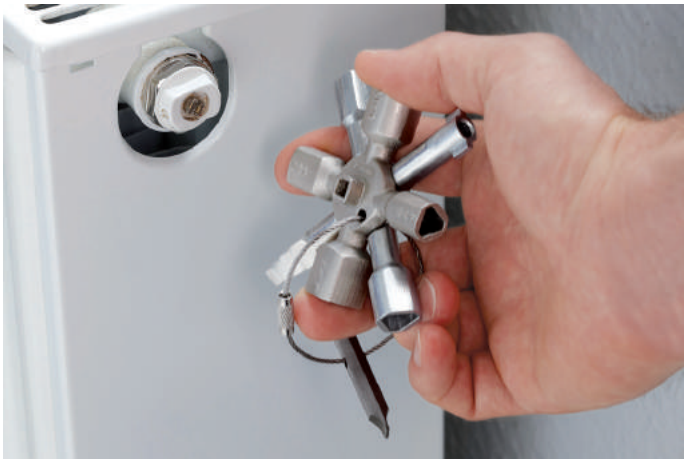









| Product Number | Packaging | ↔ Inch mm | Inch mm | Inch mm | Inch mm | Inch mm | Inch mm | lbs |
|---|---|---|---|---|---|---|---|---|
| **00 11 01** | X | 3 3/4<br>95 | 13/64, 15/64 - 9/32, 5/16 - 23/64, 25/64 - 7/16<br>5 / 6 - 7 / 8 - 9 / 10 - 11 | 9/32 - 5/16, 23/64 - 25/64, 7/16 - 15/32<br>7 - 8 / 9 - 10 / 11 - 12 | 1/8 - 13/64<br>3 - 5 | 15/64<br>6 | 15/64 - 23/64<br>6 - 9 | 0.33 |

## Control Cabinet Keys
for all standard cabinets and shut-off systems

00 11



- for control cabinets and shut-off systems in the supply of gas, water and electricity
- for technical installations in buildings, e.g. air conditioning and ventilation systems, shut-off valves, main switchboards, etc.
- with bit insert: slot 3/64 x 9/32" (1.0 x 7 mm) and cross recess PH2
- with adapter for 1/4" bits on securing chain
- additional bit adapter for 1/4" bits in one arm
- zinc die-casting

**00 11 02**
Short execution, total length 1 3/4" (44 mm)

**00 11 03**
Long execution, total length 3" (76 mm); additional square of 13/64" (5 mm)

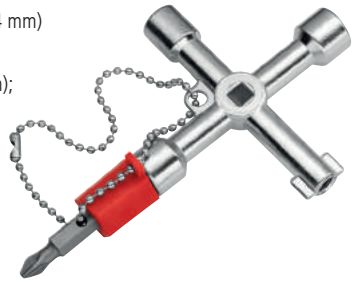

**00 11 03**

| Product Number | Packaging | ↔ Inch mm | Inch mm | Inch mm | Inch mm | lbs |
|---|---|---|---|---|---|---|
| **00 11 02** | X | 1 3/4<br>44 | 15/64, 5/16<br>6 / 8 | 23/64<br>9 | 1/8 - 13/64<br>3 - 5 | 0.11 |
| **00 11 03** | X | 3<br>76 | 13/64, 15/64, 5/16<br>5 / 6 / 8 | 23/64<br>9 | 1/8 - 13/64<br>3 - 5 | 0.17 |

## Profi-Key
for all standard shut-off systems

00 11



- key for heating, air conditioning, sanitary and building engineering, e.g. for door and window handles or for air bleeding heaters
- with bit insert: slot 3/64 x 9/32" (1.0 x 7 mm) and cross recess PH2
- with adapter for 1/4" bits on securing chain
- additional bit adapter for 1/4" bits in one arm
- total length: 3 1/2" (90 mm)
- zinc die-casting



**00 11 04**

| Product Number | Packaging | ↔ Inch mm | Inch mm | Inch mm | Inch mm | lbs |
|---|---|---|---|---|---|---|
| **00 11 04** | X | 3 1/2<br>90 | 13/64, 9/32, 5/16<br>5 / 7 / 8 | 23/64 - 25/64<br>9 - 10 | 15/64, 9/32, 5/16, 23/64<br>6 / 7 / 8 / 9 | 0.16 |

## Universal Key
for all standard cabinets and shut-off systems

**00 11**

- for locking systems in electrical engineering, the supply of gas and water, air conditioning and ventilation systems, industry, technical installations in buildings, etc.
- 9 different die-cast zinc key profiles in 1 tool
- with detachable chain and snap hook
- total length: 3 1/2" (90 mm)
- zinc die-casting



**00 11 06**



| Product Number | Packaging | ↔ Inch mm | Inch mm | Inch mm | Inch mm | Inch mm | lbs |
|---|---|---|---|---|---|---|---|
| **00 11 06** | X | 3 1/2<br>90 | 13/64, 15/64, 9/32 - 5/16, 23/64 -25/64<br>5 / 6 / 7 - 8 / 9 - 10 | 9/32, 5/16 - 23/64, 25/64 - 7/16<br>7 / 8-9 / 10 - 11 | 1/8 - 13/64<br>3 - 5 | 15/64<br>6 | 0.47 |

## Universal Key "Construction"
for all standard cabinets and shut-off systems

**00 11**

- for locking systems in electrical engineering, the supply of gas and water, air conditioning and ventilation systems, industry, technical installations in buildings, etc.
- 9 different die-cast zinc key profiles in 1 tool
- "construction" version with plug-in, magnetically held support: catch for locks with profile cylinder hole and male square in steps
- with bit adapter for 1/4" bits with magnet
- with detachable chain and snap hook
- total length: 6 1/4" (160 mm)
- zinc die-casting

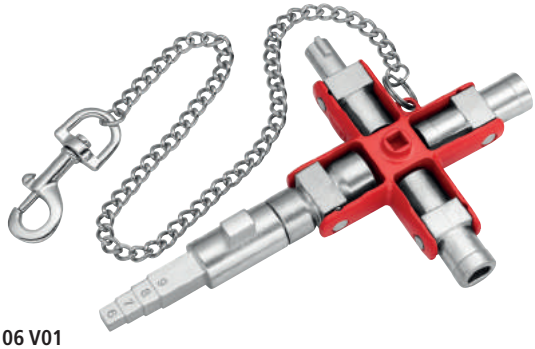

**00 11 06 V01**

| Product Number | Packaging | ↔ Inch mm | Inch mm | Inch mm | Inch mm | Inch mm | Inch mm | lbs |
|---|---|---|---|---|---|---|---|---|
| **00 11 06 V01** | X | 6 1/4<br>160 | 13/64, 15/64, 9/32 - 5/16, 23/64 -25/64<br>5 / 6 / 7 - 8 / 9 - 10 | 9/32, 5/16 - 23/64, 25/64 - 7/16<br>7 / 8 - 9 / 10 - 11 | 1/8 - 13/64<br>3 - 5 | 15/64<br>6 | 15/64, 9/32, 5/16, 23/64, 25/64<br>6 / 7 / 8 / 9 / 10 | 0.56 |

# Magnetic LED Lamp

00
11

## Strong. Bright. Compact.

- for illuminating dark working areas
- attachment to tool by means of strong magnets
- very compact dimensions
- approx. 24 hours of lighting, with 2 replaceable button cells (CR1220)
- snap hook fastening
- impact-resistant plastic housing



**00 11 V50**

**WARNING:** This product can expose you to chemicals including Nickel, which is known to the State of California to cause cancer. For more information go to

| Product Number | Packaging | ⚖ lbs |
|---|---|---|
| **00 11 V50** | X | 0.02 |

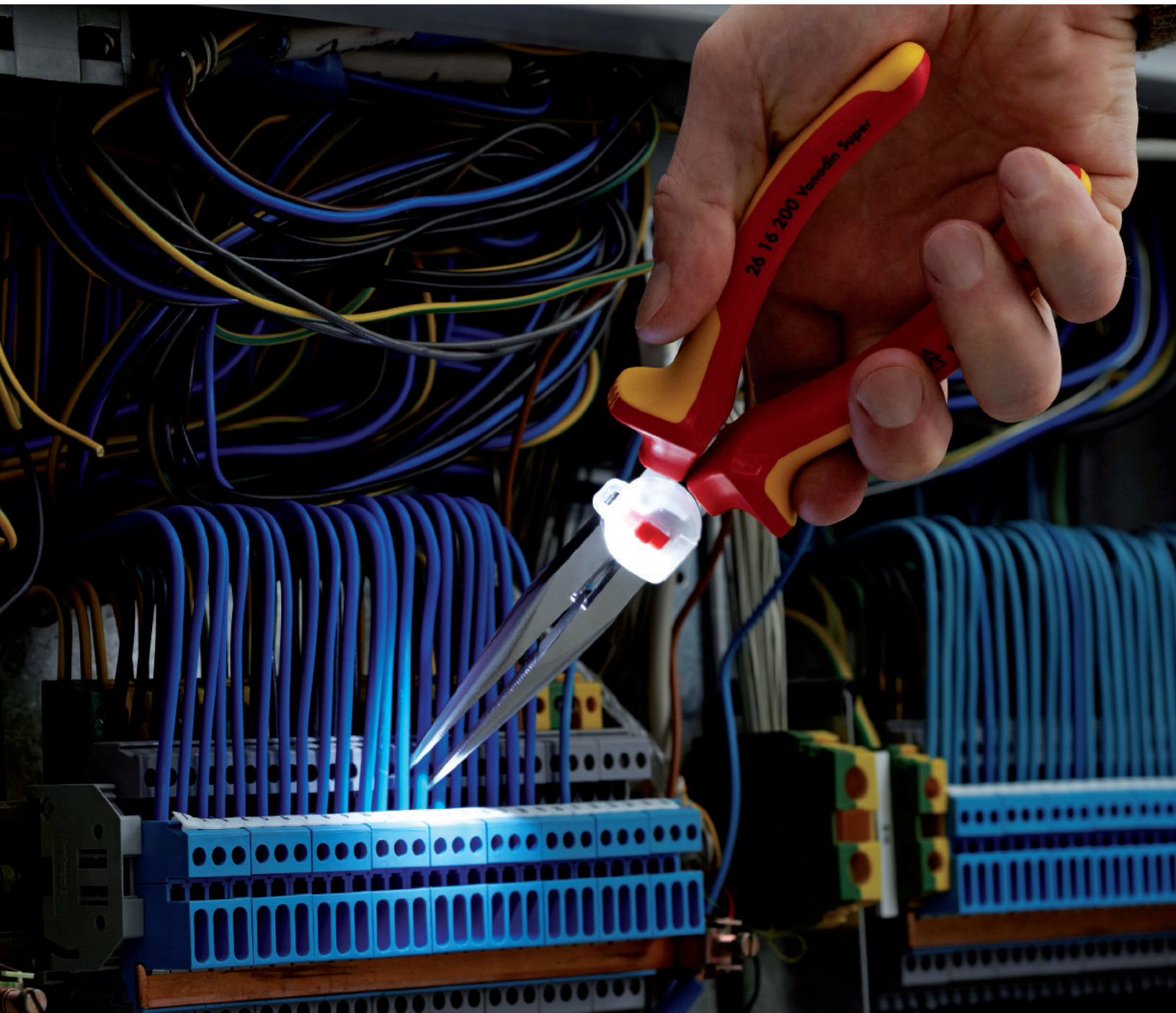

## Tool Roll
11 parts

**00 19**

- for telecommunications and electrical engineers
- tool roll made of hard-wearing polyester fabric
- with sturdy, adjustable snap closure
- contains 8 pliers and 3 screwdrivers
- pliers with chrome plated heads and two-color multi-component grips
- screwdrivers VDE tested according to DIN EN/IEC 60900 1000V



**00 19 41**

| Product Number | Packaging | | | Set contents | Units | lbs |
|---|---|---|---|---|---|---|
| **00 19 41** | | - | Tool Roll 11 parts | | - | 3.57 |
| | | | 03 05 160 | Combination Pliers | 1 | - |
| | | | 11 05 160 | Insulation Stripper | 1 | - |
| | | | 25 05 160 | Snipe Nose Side Cutting Pliers, (Radio Pliers) | 1 | - |
| | | | 30 15 160 | Long Nose Pliers | 1 | - |
| | | | 30 35 160 | | 1 | - |
| | | | 31 15 160 | Flat Nose Pliers, (Needle Nose Pliers) | 1 | - |
| | | | 67 05 140 | High Leverage End Cutting Nippers | 1 | - |
| | | | 70 05 140 | Diagonal Cutter | 1 | - |
| | | 1000 V | 98 20 25 | Screwdrivers for slotted screws | 1 | - |
| | | 1000 V | 98 20 40 | | 1 | - |
| | | 1000 V | 98 24 01 | Screwdriver for cross recessed screws, Phillips® | 1 | - |

## Family Sets
5-piece

**00 19**

- tool roll made of hard-wearing polyester fabric
- with hook and loop fastener




**00 19 55 S4**




**00 19 55 S5**

| Product Number | Packaging | | | Set contents | Units | lbs |
|---|---|---|---|---|---|---|
| **00 19 55 S4** | | - | Set of Pliers Wrenches | | - | 4.54 |
| | | | 86 03 125 | Pliers Wrench, Pliers and Wrench in a single tool | 1 | - |
| | | | 86 03 150 | | 1 | - |
| | | | 86 03 180 | | 1 | - |
| | | | 86 03 250 | | 1 | - |
| | | | 86 03 300 | | 1 | - |
| **00 19 55 S5** | | - | Set of Cobra Water Pump Pliers | | - | 3.45 |
| | | | 87 01 125 | The original push-button pliers | 1 | - |
| | | | 87 01 150 | | 1 | - |
| | | | 87 01 180 | | 1 | - |
| | | | 87 01 250 | | 1 | - |
| | | | 87 01 300 | | 1 | - |

# Circlip Pliers Sets

> tool roll made of hard-wearing polyester fabric
> with sturdy, adjustable snap closure

**00 19 56**
4 common Circlip Pliers for internal and external circlips

**00 19 57**
4 common Precision Circlip Pliers for highest requirements

**00 19 58 V01**
8 common Circlip Pliers for internal and external circlips

**00 19 58 V02**
8 common Precision Circlip Pliers for highest requirements



**00 19 56**



**00 19 57**

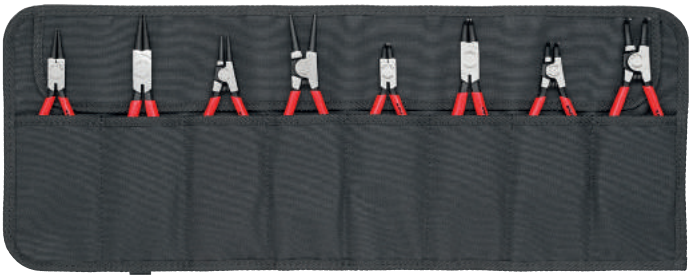

**00 19 58 V01**



**00 19 57**

| Product Number | Packaging | | | Set contents | Units | lbs |
|---|---|---|---|---|---|---|
| **00 19 56** | X | - | Set of Circlip Pliers | - | - | 1.58 |
| | | | 44 11 J2 | Circlip Pliers, for internal circlips in bore holes | 1 | - |
| | | 90° | 44 21 J21 | | 1 | - |
| | | | 46 11 A2 | Circlip Pliers, to assemble external circlips on shafts | 1 | - |
| | | 90° | 46 21 A21 | | 1 | - |
| **00 19 57** | X | - | Set of Precision Circlip Pliers | - | - | 1.62 |
| | | | 48 11 J1 | Precision Circlip Pliers, for internal circlips in bore holes | 1 | - |
| | | | 48 11 J2 | | 1 | - |
| | | | 49 11 A1 | Precision Circlip Pliers, to assemble external circlips on shafts | 1 | - |
| | | | 49 11 A2 | | 1 | - |
| **00 19 58 V01** | X | - | Set of Circlip Pliers | - | - | 1.48 |
| | | | 44 11 J1 | Circlip Pliers, for internal circlips in bore holes | 1 | - |
| | | | 44 11 J2 | | 1 | - |
| | | 90° | 44 21 J11 | | 1 | - |
| | | 90° | 44 21 J21 | | 1 | - |
| | | | 46 11 A1 | Circlip Pliers, to assemble external circlips on shafts | 1 | - |
| | | | 46 11 A2 | | 1 | - |
| | | 90° | 46 21 A11 | | 1 | - |
| | | 90° | 46 21 A21 | | 1 | - |
| **00 19 58 V02** | X | - | Set of Precision Circlip Pliers | - | - | 1.47 |
| | | | 48 11 J1 | Circlip Pliers, for internal circlips in bore holes | 1 | - |
| | | | 48 11 J2 | | 1 | - |
| | | 90° | 48 21 J11 | | 1 | - |
| | | 90° | 48 21 J21 | | 1 | - |
| | | | 49 11 A1 | Circlip Pliers, to assemble external circlips on shafts | 1 | - |
| | | | 49 11 A2 | | 1 | - |
| | | 90° | 49 21 A11 | | 1 | - |
| | | 90° | 49 21 A21 | | 1 | - |
| **00 19 56 LE** | Empty tool roll | | | | | |

## Belt pouch
empty

00
19

- made of hard-wearing polyester fabric
- for two pliers up to 6" (150 mm) length
- with hook and loop fastener
- with elastic side
- with practical belt loop




**00 19 72 LE**

| Product Number | Packaging | Width<br>Inch<br>mm | Height<br>Inch<br>mm | Depth<br>Inch<br>mm | lbs |
|---|---|---|---|---|---|
| **00 19 72 LE** | X | 2 9/16<br>65 | 6 7/64<br>155 | 1<br>25 | 0.17 |

## Tool Pouch
empty

00
19

- made of hard-wearing polyester fabric and leather
- with pockets for up to 8 tools
- tool loops made of leather, riveted
- with snap hook




**00 19 73 LE**

| Product Number | Packaging | Width<br>Inch<br>mm | Height<br>Inch<br>mm | Depth<br>Inch<br>mm | lbs |
|---|---|---|---|---|---|
| **00 19 73 LE** | X | 6 3/4<br>170 | 9 1/4<br>235 | 3<br>75 | 0.45 |

# Pliers Sets
in a foam tray

00
20

- packaged in a foam tray for workbenches and tool trolleys
- clearly organized storage of tools
- precisely sized recesses for holding the pliers
- foam insert dimensions (L x W x H):
  13 3/16 x 6 1/2 x 1 19/64" (335 x 165 x 33 mm)
- material: two-color, closed pore foam



**00 20 01 V02**

**00 20 01 V02**
6 Circlip Pliers in a foam tray

**00 20 01 V15**

**00 20 01 V16**

**00 20 01 V17**
4 pliers in a foam tray





**00 20 01 V15**



**00 20 01 V17**



**00 20 01 V16**

| Product Number | Packaging | | | Set contents | Units | lbs |
|---|---|---|---|---|---|---|
| **00 20 01 V02** | X | - | Circlip Pliers Set six precision circlip pliers in a foam tray | | - | 2.02 |
| | | | 48 11 J1 | Precision Circlip Pliers, for internal circlips in bore holes | 1 | - |
| | | | 48 11 J2 | | 1 | - |
| | | 90° | 48 21 J21 | | 1 | - |
| | | | 49 11 A1 | Precision Circlip Pliers, for external circlips on shafts | 1 | - |
| | | | 49 11 A2 | | 1 | - |
| | | 90° | 49 21 A21 | | 1 | - |
| **00 20 01 V15** | X | - | Pliers Set "Basic" four pliers in a foam tray | | - | 2.47 |
| | | | 03 02 180 | Combination Pliers | 1 | - |
| | | | 26 12 200 | Snipe Nose Side Cutting Pliers, (Stork Beak Pliers) | 1 | - |
| | | | 74 02 180 | High Leverage Diagonal Cutter | 1 | - |
| | | | 87 01 250 | KNIPEX Cobra, High-Tech Water Pump Pliers | 1 | - |
| **00 20 01 V16** | X | - | Pliers Set "Automotive" four pliers in a foam tray | | 1 | 1.87 |
| | | | 08 21 145 | Needle-Nose Combination Pliers | 1 | - |
| | | | 74 01 180 | High Leverage Diagonal Cutter | 1 | - |
| | | | 28 71 280 | Long Reach Needle Nose Pliers, with transverse profiles | 1 | - |
| | | 45° | 28 81 280 | Long Reach Needle Nose Pliers, with transverse profiles | 1 | - |
| **00 20 01 V17** | X | - | Pliers Set "Basic" four pliers in a foam tray | | - | 2.41 |
| | | | 03 05 180 | Combination Pliers | 1 | - |
| | | | 26 15 200 | Snipe Nose Side Cutting Pliers, (Stork Beak Pliers) | 1 | - |
| | | | 74 05 180 | High Leverage Diagonal Cutter | 1 | - |
| | | | 87 05 250 | KNIPEX Cobra®, High-Tech Water Pump Pliers | 1 | - |

# Precision Circlip Pliers Sets

00
20

> contains the most common Precision Circlip Pliers
> form-fitted inserted and pressed-in tips made of high density spring steel
> up to 10 times longer service life compared to turned tips
> internal design for fitting internal circlips in bore holes
> external design for fitting circlips on shafts

**00 20 03 SB**
4 parts
**00 20 04 SB**
8 parts



**00 20 03 SB**



**00 20 04 SB**

| Product Number | Packaging | | | Set contents | Units | lbs |
|---|---|---|---|---|---|---|
| **00 20 03 SB** | X | - | Precision Circlip Pliers Set | - | - | 1.51 |
| | | | 48 11 J1 | Precision Circlip Pliers, for internal circlips in bore holes | 1 | - |
| | | | 48 11 J2 | | 1 | - |
| | | | 49 11 A1 | Precision Circlip Pliers, to assemble external circlips on shafts | 1 | - |
| | | | 49 11 A2 | | 1 | - |
| **00 20 04 SB** | X | - | Precision Circlip Pliers Set | - | - | 2.81 |
| | | | 48 11 J1 | Precision Circlip Pliers, for internal circlips in bore holes | 1 | - |
| | | | 48 11 J2 | | 1 | - |
| | | | 49 11 A1 | Precision Circlip Pliers, to assemble external circlips on shafts | 1 | - |
| | | | 49 11 A2 | | 1 | - |
| | | | 48 21 J11 | Precision Circlip Pliers, for internal circlips in bore holes | 1 | - |
| | | | 48 21 J21 | | 1 | - |
| | | | 49 21 A11 | Precision Circlip Pliers, to assemble external circlips on shafts | 1 | - |
| | | | 49 21 A21 | | 1 | - |

# Circlip Pliers Sets

00
20

> contains the most common internal and external Circlip Pliers
> internal design for fitting internal circlips in bore holes
> external design for fitting circlips on shafts

**00 20 03 V02**
4 parts
**00 20 04 V01**
8 parts



**00 20 03 V02**



**00 20 04 V01**

| Product Number | Packaging | | | Set contents | Units | lbs |
|---|---|---|---|---|---|---|
| **00 20 03 V02** | X | - | Set of Circlip Pliers | - | - | 0.99 |
| | | | 44 11 J1 | Circlip Pliers, for internal circlips in bore holes | 1 | - |
| | | | 44 11 J2 | | 1 | - |
| | | | 46 11 A1 | Circlip Pliers, to assemble external circlips on shafts | 1 | - |
| | | | 46 11 A2 | | 1 | - |
| **00 20 04 V01** | X | - | Set of Circlip Pliers | - | - | 1.96 |
| | | | 44 11 J1 | Circlip Pliers, for internal circlips in bore holes | 1 | - |
| | | | 44 11 J2 | | 1 | - |
| | | | 44 21 J11 | | 1 | - |
| | | | 44 21 J21 | | 1 | - |
| | | | 46 11 A1 | Circlip Pliers, to assemble external circlips on shafts | 1 | - |
| | | | 46 11 A2 | | 1 | - |
| | | | 46 21 A11 | | 1 | - |
| | | | 46 21 A21 | | 1 | - |

# Pliers Sets
in plastic deep-drawn packaging

00
20

> popular pliers sets in durable plastic packaging



00 20 05 US



00 20 06 US1



00 20 07 US1



00 20 08 US1



00 20 08 US2



00 20 06 US2

| Product Number | Packaging | | | Set contents | Units | lbs |
|---|---|---|---|---|---|---|
| **00 20 05 US** | X | - | Set of High Leverage Diagonal Cutters | - | - | 2.15 |
| | | | 74 01 160 | High Leverage Diagonal Cutter | 1 | - |
| | | | 74 01 250 | | 1 | - |
| | | 12° | 74 21 200 | | 1 | - |
| **00 20 06 US1** | X | - | Cobra® Water Pump Pliers Set | - | - | 2.69 |
| | | | 87 01 180 | KNIPEX Cobra® High-Tech Water Pump Pliers | 0 | - |
| | | | 87 01 250 | | 0 | - |
| | | | 87 01 300 | | 0 | - |
| **00 20 06 US2** | X | - | Pliers Wrench Set | - | - | 3.64 |
| | | | 86 03 180 | Pliers Wrench | 1 | - |
| | | | 86 03 250 | | 1 | - |
| | | | 86 03 300 | | 1 | - |
| **00 20 07 US1** | X | - | Alligator® Water Pump Pliers Set | - | - | 2.65 |
| | | | 88 01 180 | KNIPEX Alligator® Water Pump Pliers | 1 | - |
| | | | 88 01 250 | | 1 | - |
| | | | 88 01 300 | | 1 | - |
| **00 20 08 US1** | X | - | Universal Pliers Set w/Alligator® | - | - | 2.15 |
| | | | 26 11 200 | Chain Nose Side Cutting Pliers, (stork beak pliers) | 1 | - |
| | | 12° | 74 21 200 | High Leverage Diagonal Cutter | 1 | - |
| | | | 88 01 250 | KNIPEX Alligator® Water Pump Pliers | 1 | - |
| **00 20 08 US2** | X | - | Universal Pliers Set w/Cobra® | - | - | 2.15 |
| | | | 26 11 200 | Chain Nose Side Cutting Pliers, (stork beak pliers) | 1 | - |
| | | 12° | 74 21 200 | High Leverage Diagonal Cutter | 1 | - |
| | | | 87 01 250 | KNIPEX Cobra® High-Tech Water Pump Pliers | 1 | - |

- tools in plastic deep-drawn packaging with transparent lid
- attractive sales packaging
- dimensions (W x H x D):
  6 3/4" x 15" x 1 1/2"

**00 20 09 V01**
Pliers with polished heads; handles with non-slip plastic coating or with two-color multi-component grips

**00 20 10**
Pliers with polished heads and plastic coated handles

**00 20 11**
Pliers with two-color multi-component handles




**00 20 09 V01**




**00 20 10**




**00 20 11**

| Product Number | Packaging | | | Set contents | Units | lbs |
|---|---|---|---|---|---|---|
| **00 20 09 V01** | X | - | Bestseller Pack | - | - | 2.09 |
| | | | 03 02 180 | Combination Pliers | 1 | - |
| | | | 70 02 160 | Diagonal Cutter | 1 | - |
| | | | 87 01 250 | KNIPEX Cobra® High-Tech Water Pump Pliers | 1 | - |
| **00 20 10** | X | - | Power Pack | - | - | 2.18 |
| | | | 02 01 180 | High Leverage Combination Pliers | 1 | - |
| | | | 74 01 160 | High Leverage Diagonal Cutter | 1 | - |
| | | | 87 01 250 | KNIPEX Cobra® High-Tech Water Pump Pliers | 1 | - |
| **00 20 11** | X | - | Assembly Pack | - | - | 1.79 |
| | | | 03 02 180 | Combination Pliers | 1 | - |
| | | | 26 12 200 | Chain Nose Side Cutting Pliers (stork beak pliers) | 1 | - |
| | | | 70 02 160 | Diagonal Cutter | 1 | - |

# Electronics Pliers Sets
for working on electronic components

00
20

**00 20 16**
7 parts, contains 6 electronics pliers and one pair of precision tweezers; case made of hard-wearing polyester fabric, pliers are held by elastic band, zippered

**00 20 16 P**
6 parts, contains 6 precision electronics pliers; case made of hard-wearing polyester fabric, pliers are held by elastic band, zippered

**00 20 16 P ESD**
6 parts, contains 6 ESD precision electronics pliers, electrically discharging version; case made of hard-wearing polyester fabric, pliers are held by elastic band, zippered

**00 20 17**
6 parts, contains 6 ESD electronics pliers, electrically discharging version; case made of hard-wearing polyester fabric, pliers are held by elastic band, zippered

**00 20 18**
8 parts, contains 2 electronics pliers and 6 electronics screwdrivers; practical storage box, shock-resistant plastic, with foam insert

**00 20 18 ESD**
8 parts, contains 2 ESD electronics pliers and 6 electronics screwdrivers, electrically discharging version; practical storage box, shock-resistant plastic, with foam insert



00 20 16



00 20 16 P ESD



00 20 16 P



00 20 17



00 20 18



00 20 18 ESD

**ESD Pliers (electrostatic discharge)**

Electrostatic energy is discharged through the handles in a gradual and controlled manner which protects components endangered by electrostatic discharge in accordance with applicable standards, e.g. IEC TR 61 340-5, DIN EN 61 340-5, SP Method 2472

| Product Number | Packaging | Set contents | lbs |
|---|---|---|---|
| **00 20 16** | | 35 12 115 / 35 22 115 / 35 32 115 / 64 32 120 / 77 02 115 / 77 42 115 / 92 34 36 | 1.59 |
| **00 20 16 P** | | 34 12 130 / 34 22 130 / 34 32 130 / 79 02 120 / 79 02 125 / 79 42 125 | 1.27 |
| **00 20 16 P ESD** | | 34 12 130 ESD / 34 22 130 ESD / 34 32 130 ESD / 79 02 120 ESD / 79 02 125 ESD / 79 42 125 ESD | 1.29 |
| **00 20 17** | | 35 12 115 ESD / 35 22 115 ESD / 35 42 115 ESD / 64 32 120 ESD / 77 02 115 ESD / 77 32 115 ESD | 1.53 |
| **00 20 18** | | 35 22 115 / 77 02 115 / screw drivers 0.4 x 2.5 / 0.5 x 3.0 / 0.6 x 3.5 / 0.8 x 4.0 / PH0 / PH1 | 1.01 |
| **00 20 18 ESD** | | 35 22 115 ESD / 77 02 115 ESD / screw drivers 0.4 x 2.5 / 0.5 x 3.0 / 0.6 x 3.5 / 0.8 x 4.0 / PH0 / PH1 | 1.03 |

## Mini Pliers Sets
in belt tool pouch

**00 20**

- small tools that can be carried easily on any job
- belt tool pouch can carry 2 tools up to 6" long
- tool bag made of tough polyester fabric, with hook and loop fastening and belt loop
- attractive cardboard packaging for merchandising
- dimensions (W x H x D):
  2 3/4 x 6 11/16 x 2" (70 x 170 x 50 mm)




**00 20 72 V02**

**00 20 72 V01**

| Product Number | Packaging | | | Set contents | Units | lbs |
|---|---|---|---|---|---|---|
| **00 20 72 V01** | X | - | Mini pliers set in belt tool pouch | - | - | 0.77 |
| | | | 86 03 150 | Mini Pliers Wrench | 1 | - |
| | | | 87 01 125 | KNIPEX Cobra® High-Tech Water Pump Pliers | 1 | - |
| **00 20 72 V02** | X | - | Mini pliers set in belt tool pouch | - | - | 0.86 |
| | | | 74 01 160 | High Leverage Diagonal Cutter | 1 | - |
| | | | 87 01 150 | KNIPEX Cobra® High-Tech Water Pump Pliers | 1 | - |

| | |
|---|---|
| **00 19 72 LE** | Belt pouch for two pairs of pliers, empty |

## Pliers Sets
2-Piece

**00 31**

- perfect starter sets with our most popular pump pliers
- 7 1/4" and 10" sizes
- the Cobra Pliers set offers a push-button adjustment that stays set in place until you change it.
- the Alligator Pliers set offers easy adjustment with 9 positions to find the perfect position




**00 31 V01 US**

**00 31 20 V02**

| Product Number | Packaging | | | Set contents | Units | lbs |
|---|---|---|---|---|---|---|
| **00 31 V01 US** | X | - | Cobra® Water Pump Pliers Set | - | - | 1.15 |
| | | | 87 01 180 | KNIPEX Cobra® High-Tech Water Pump Pliers | 1 | - |
| | | | 87 01 250 | KNIPEX Cobra® High-Tech Water Pump Pliers | 1 | - |
| **00 31 20 V02** | X | - | Alligator® Water Pump Pliers Set | - | - | 1.18 |
| | | | 88 01 180 | KNIPEX Alligator® Water Pump Pliers | 1 | - |
| | | | 88 01 250 | KNIPEX Alligator® Water Pump Pliers | 1 | - |

# Tool Case "BIG Twin Move"

with integrated rollers and telescopic handle
empty

**00 21**



- heavy-duty ABS material, black
- all-round aluminum frame mounted sturdy center board, each side contains multi-purpose push-in facilities by elastic loops and 12 small pockets
- pull-out handle embedded in the base and two integrated smooth in-line skater runners
- 66 pound (30 kg) maximum load
- can be opened on one or both sides (V form); base tray and cover can be partially or fully opened independently of each other; stands securely in all opening positions; the special runners are gentle on the floor and ensure stability
- lockable
- removable document compartment and removable tool panel with 13 tool pouches
- base tray height 2 23/64" (60 mm), can be subdivided by flexible inserts; tool panel as cover plate with 13 tool pouches









**00 21 41 LE**

| Product Number | Packaging | Dimension external (internal) width<br>Inch<br>mm | Dimension external (internal) height<br>Inch<br>mm | Dimension external (internal) depth<br>Inch<br>mm | lbs |
|---|---|---|---|---|---|
| **00 21 41 LE** | | 20 (18 7/8, 17 1/2)<br>510 (480/445) | 10 5/8 (4 9/64)<br>270 (105) | 16 9/64 (14 9/16, 13)<br>410 (370/330) | 18.96 |


26 15 200
MADE IN GERMANY
max. drop 3m/10ft
max.400N
Vanadin-Super
KNIPEX




Effective protection against accidents caused by falling tools. The tether attachment is on the multi-component handles.

# The tether attachment point for the range with multi-component handles

Tools can fall down anytime you are using them from a high height, for example; when using them on cherry pickers, scaffolding, ladders and by industrial climbers working with wire rope hoists.

**KNIPEX offers a wide range of pliers and accessories that can reliably prevent the KNIPEX pliers from falling down.**

There is a very stable tether attachment on the inside of the handles which is welded onto the handle for attaching the tether or adapter strap. The lug enables the equipment to be attached and put down quickly. The sophisticated elements from our KNIPEX Tethered Tools Program offers several individual variations for connection and use.




Tether attachment: dynamic load capacity for a max. fall height of 10 ft / 3 m by a tool from the KNIPEX TT range.

Please read all warnings on product packaging carefully

> Do not use on live circuits. Always switch off power.
> Always wear approved eye protection.
> NO PPE = No Personal Protective Equipment.
> Only for latching tools from the KNIPEX Tethered Tools range, connected and combined in accordance with this description.
> Tether extends to length of around 5 feet (1.5 m) rig to avoid contact with objects below.
> Do not use around moving or rotating equipment.
> Will not support human weight.
> Inspect for wear before each use. Do not use if evidence of wear.



# The Tool Drop Protection System

## for tools with tether attachment

- Versatile application potential ranging from building construction to industrial climbers
- Reliably prevents the tool from falling down, and can protect against serious injuries, damage to property or loss

### Tether

00 50

> wide working radius: flexible tether for user-friendly work
> variable fastening options: with strap made of a flat belt sewn to one end and a cord and cord stopper sewn into the other end
> suitable for all KNIPEX pliers with tether attachment



### Adapter Straps

00 50

> diverse options for fastening in combination with the carabiner and the tether
> permits fast, safeguarded switching from the fastener on the tool bag to the tether and from one tool to another
> suitable for all KNIPEX pliers with tether attachment



### Carabiners

00 50

> with screw lock to prevent accidental opening
> strong and light aluminum design weighing just 1 ounce
> for connecting adapter strap and tether or to attach these to a fixed point







**00 50 04 T BKA:** The complete tethering system set

The tether made of gathered fabric tape expands to a length of approx. 5' (1.5 m) when under strain

When tightened, the screw lock prevents inadvertent opening of the carabiner

The adapter strap provides the flexible connection between tool and the reliable tether point

**Read all warnings before using**







# Pliers with tether attachment point

## Complete range

### Pliers range with tether attachment point for a tool tether

| | Product Number | Description |
|---|---|---|
|  | 02 02 225 T BKA<br>black atramentized;<br>head polished | High Leverage Combination Pliers,<br>requires 35% less effort than conventional combination pliers |
|  | 08 22 145 T BKA<br>black atramentized;<br>head polished | Needle-Nose Combination Pliers,<br>slim head for use in inaccessible work areas |
|  | 09 02 240 T BKA<br>black atramentized;<br>head polished | Lineman´s Pliers, ultra-high leverage design<br>for 25% easier cutting power |
|  | 09 12 240 T BKA<br>black atramentized;<br>head polished | 09 12 240 T BKA: with a universal terminal crimper and a fish tape puller on the backside |
|  | 13 02 614 T BKA<br>black atramentized;<br>head polished | Electrician's Pliers, ideal for cable work, gripping and bending wire or even cutting medium hard and hard wire |
|  | 13 82 8 T BKA<br>black atramentized;<br>head polished | Electrical Installation Pliers, multifunctional 6-in-1 pliers for electrical installation; cutting, stripping, crimping, gripping, bending and deburring |
|  | 26 12 200 T BKA<br>black atramentized;<br>head polished | Long Nose Pliers w/Cutter,<br>elastic precision tips will not deform or bend and will spring back into place |
|  | 26 22 200 T BKA<br>black atramentized;<br>head polished | 26 22 200 T BKA: with 40° angled tips for hard to reach spaces |
|  | 71 02 200 T BKA<br>black atramentized | KNIPEX CoBolt® Compact Bolt Cutters,<br>particularly high cutting performance with little physical effort |
|  | 71 22 200 T BKA<br>black atramentized | 71 22 200 T BKA: 20° angled head with single-sided joint bar and diagonal cutting edge for almost flush cutting |
|  | 71 32 200 T BKA<br>black atramentized | 71 32 200 T BKA: notch in the blade for cutting thicker wire |
|  | 74 02 200 T BKA<br>black atramentized;<br>head polished | High Leverage Diagonal Cutters,<br>high cutting performance with minimum effort. Available in 8" and 10" lengths |
|  | 74 02 250 T BKA<br>black atramentized;<br>head polished | |
|  | 74 22 200 T BKA<br>black atramentized;<br>head polished | 12° angled head in a 8" length |
|  | 74 22 250 T BKA<br>black atramentized;<br>head polished | 12° angled head in a 10" length |

### Pliers range with tether attachment point for a tool tether

| | Product Number | Description |
|---|---|---|
|  | 86 05 180 T BKA<br>chrome plated | Pliers Wrenches, pliers and a wrench in a single tool, for damage free installation of plated fittings; Available in 7 1/4" and 10" lengths |
|  | 86 05 250 T BKA<br>chrome plated | |
|  | 87 02 180 T BKA<br>grey atramentized;<br>head polished | KNIPEX Cobra® High-tech Water Pump Pliers, grips any shaped object – round, square, hex or flat. Push-button adjustment means that once the capacity is set, it stays set. Available in 7 1/4", 10" and 12" lengths |
|  | 87 02 250 T BKA<br>grey atramentized;<br>head polished | |
|  | 87 02 300 T BKA<br>grey atramentized;<br>head polished | |
|  | 88 02 250 T BKA<br>black atramentized;<br>head polished | KNIPEX Alligator® Water Pump Pliers,<br>self-locking on pipes and nuts – no slipping off the workpiece, box-joint design for high stability. Available in 10" and 12" lengths |
|  | 88 02 300 T BKA<br>black atramentized;<br>head polished | |
|  | 95 12 165 T BKA<br>burnished | Cable Shears, precision ground, hardened blades: clean and smooth cut without crushing and deformation |
|  | 95 62 190 T BKA<br>head polished | Wire Rope Cutter, special blade geometry prevents the wire rope from fanning out |

## VDE Pliers range with tether attachment point for a tool tether

| | Product Number | Description |
|---|---|---|
|  | 26 16 200 T N<br>chrome plated | Snipe Nose Side Cutting Pliers, (Stork Beak Pliers), extremely durable, elastic precision tips; half-round, long, pointed jaws<br><br>26 16 200 T: straight<br>26 26 200 T: bent |
|  | 26 26 200 T N<br>chrome plated | |
|  | 70 06 160 T N<br>chrome plated | Diagonal Cutter, slim head for use in inaccessible work areas; available with fall protection in a compact length of 160 mm and a robust 180 mm length |
|  | 70 06 180 T N<br>chrome plated | |
|  | 74 06 200 T N<br>chrome plated | High Leverage Diagonal Cutters, high cutting performance with minimum effort; Available with fall protection in lengths of 200 mm and 250 mm |
|  | 74 06 250 T N<br>chrome plated | |
|  | 87 26 250 T N<br>chrome plated | KNIPEX Cobra® VDE, High-Tech Water Pump Pliers, push the button for adjustment on the workpiece and nuts |
|  | 95 16 165 T N<br>chrome plated | Cable Shears, precision ground, hardened blades: clean and smooth cut without crushing and deformation |

## Drop protection system for tools with tether attachment point

| | Product Number | Description |
|---|---|---|
|  | 00 50 01 T BK N | 1 x Tether<br>Wide working radius: the tether made of gathered fabric tape expands to a length of approx. 1.5 m when under strain |
| 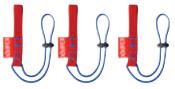 | 00 50 02 T BK N | 3 x Adapter straps<br>Flexible connection between tool and the reliable tether point |
|  | 00 50 03 T BK N | 2 x Carabiner<br>When tightened, the screw lock prevents inadvertent opening of the carabiner |
|  | 00 50 04 T BK N | Tethering System Set<br>For diverse options for attaching KNIPEX pliers using the tether attachment<br>(1 x Tether, 3 x Adapter straps, 2 x Carabiner) |

Testing dielectric strength, subjecting each pair of pliers to a load of 10,000 V AC.

# Insulated tools are a matter of trust

Professionals trust their tools. This trust is vital when working on electrical installations. In this case, the electrician holding the pliers is also holding his life in his hands. Our insulated tools therefore not only meet statutory requirements, but also offer the greatest possible safety, reliability and performance.



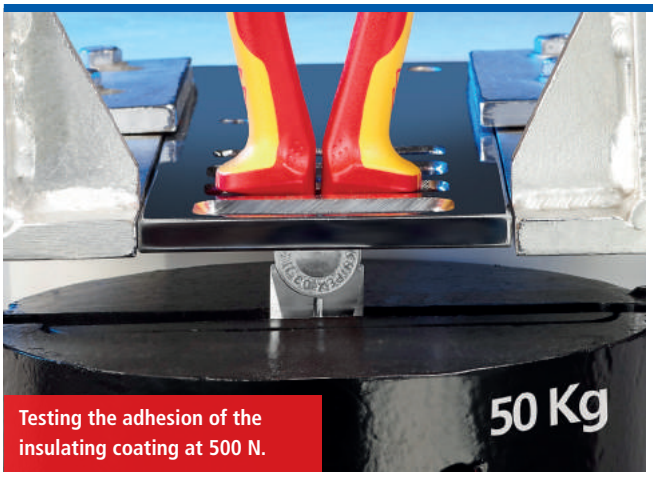


Testing the adhesion of the insulating coating at 500 N.



Pressure test at 70°C.



Low temperature impact test.



Testing the electrical insulating properties.

### Regulated by standards

Only trained professionals are allowed to work on live installations. Such work is subject to strict occupational health and safety standards such as the German DIN VDE 0105, the international EN 50110 and IEC 60364 and the USA NFPA 70E. In each case they must deploy special tools that have been specifically manufactured and tested for this work. Tools used in live work must meet the requirements determined by DIN EN / IEC 60900 and NFPA 70E. KNIPEX tools which bear the special mark 1000 V are approved for work up to 1000 V AC.

### Guaranteed individually checked

Every insulated tool undergoes, one by one, a dielectric strength at 10,000 V AC before we sell it. This means that work in the area up to 1,000 V AC has a safety buffer of ten times the permitted maximum limit. Other procedures check the reliability of the insulation towards heat, cold, tensile and impact force. In addition to the KNIPEX quality assurance team, external institutes and test centers such as the VDE guarantee that all insulated criteria have been satisfied. We stand by this responsibility with our name on the insulation of KNIPEX tools.

### Strong beneath the insulation

The insulation provides safety when handling electrical installations, but the mechanical properties of the basic tool, such as cutting performance, precision and stability remain the other key-factor for a reliable function of insulated tools.

With our insulated pliers, users can depend on the quality and durability of products from KNIPEX production. For assembly tools insulated by us, we use basic tools from tried and tested suppliers whose quality we subject to regular, stringent checks. The expert can rely on this double dependability of tool and insulation.

**Always comply with the current valid regulations and observe the SAFETY INSTRUCTIONS given below:**

> Insulated tools must be transported in a manner that will prevent any damage to the insulation.

> Check before every use whether the insulation is damaged in any way, defective tools must be discarded.

> Always keep your insulated tools clean and dry.

> Wear protective goggles when working with cutting nippers or working overhead.

> Always wear goggles or a facial mask when working on live equipment.

> Make sure the workplace is clean and orderly, particularly when you are working on live installations.

> Wear protective clothing and use SAFETY equipment (e.g. insulating gloves, insulating mats, protective covers) especially in confined working spaces.

> Use only a tool with suitable dimensions. That will prevent slipping on the workpiece and unintentional contact with non-insulated parts.

> Make sure that detached parts or cut-off ends of conductors do not fall onto live parts.

## High Leverage Combination Pliers
DIN ISO 5746 IEC 60900 DIN EN 60900

**02**

35% less effort required than with conventional combination pliers
Cutting edge hardness (approx. 63 HRC) for heavy-duty cutting

> easier work due to high leverage design
> easier cutting, powerful gripping, bending and pulling
> long cutting edges for thicker cables
> gripping zones for flat and round material for a variety of uses
> high-grade special tool steel; forged, multi stage oil-hardened




**02 08 200 US**
1000 V **ASTM**




**02 08 225 US**
1000 V **ASTM**

| Product Number | Packaging | ↔ Inch mm | | Pliers | Head | Handles | Cutting capacities Ø Inch Ø mm | Ø Inch Ø mm | Ø Inch Ø mm | mm² | lbs |
|---|---|---|---|---|---|---|---|---|---|---|---|
| **02 08 200 US** | X | 8 200 | 1000 V ASTM | black atramentized | polished | insulated, multi-component grips, ASTM-tested | 7/64 2.8 | 3/32 2.2 | 1/2 13.0 | 25.0 | 0.82 |
| **02 08 225 US** | X | 9 225 | | | | | 1/8 3.0 | 3/32 2.5 | 35/64 14.0 | 25.0 | 0.95 |

## Combination Pliers
DIN ISO 5746 IEC 60900 DIN EN 60900

**03**

> gripping zones for flat and round material for a variety of uses
> cutting edges for soft and hard wire
> long cutting edges for thicker cables
> cutting edge hardness (approx. 60 HRC)
> special tool steel; forged, multi stage oil-hardened

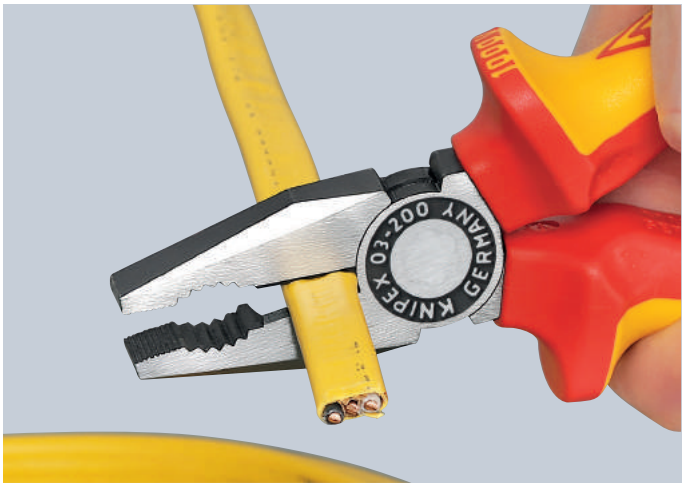





**03 08 160 SBA**
1000 V **ASTM**




**03 08 200 SBA**
1000 V **ASTM**

| Product Number | Packaging | ↔ Inch mm | | Pliers | Head | Handles | Cutting capacities Ø Inch Ø mm | Ø Inch Ø mm | Ø Inch Ø mm | mm² | lbs |
|---|---|---|---|---|---|---|---|---|---|---|---|
| **03 08 160 SBA** | X | 6 1/4 160 | 1000 V ASTM | black atramentized | polished | insulated, multi-component grips, ASTM-tested | 1/8 3.1 | 5/64 2.0 | 25/64 10.0 | 16.0 | 0.55 |
| **03 08 200 SBA** | X | 8 200 | | | | | 5/32 3.8 | 3/32 2.5 | 1/2 13.0 | 16.0 | 0.76 |

## Needle-Nose Combination Pliers
DIN ISO 5746

08

**Small high leverage combination pliers with pointed jaw**
**For all common installation and repair work**

Handy for use when working in confined areas due to slim head design and pointed jaws (anti-twist)

> easy cutting due to the high leverage joint
> cutting edges for soft, medium hard and hard wire
> long service life and stable tips
> high-grade special tool steel; forged, multi stage oil-hardened




**08 28 145 US**
1000 V ASTM

| Product Number | Packaging | ↔ Inch mm | | Pliers | Head | Handles | Cutting capacities Ø Inch Ø mm | Ø Inch Ø mm | Ø Inch Ø mm | mm² | lbs |
|---|---|---|---|---|---|---|---|---|---|---|---|
| **08 28 145 US** | X | 5 3/4 145 | 1000 V ASTM | black atramentized | polished | insulated, multi-component grips, VDE-tested | 1/8 3.0 | 5/64 2.0 | 5/16 8.0 | 16.0 | 0.39 |

## Lineman's Pliers
DIN ISO 5746 IEC 60900 DIN EN 60900

09

> effective cross-hatched knurled gripping zone in the jaws – for strong gripping and pulling
> cutting edges for soft and hard wire, nails, ACSR and piano wire
> cutting edge hardness (approx. 64 HRC)
> vanadium steel, forged, multi stage oil-hard




**09 08 240 US**
1000 V ASTM

| Product Number | Packaging | ↔ Inch mm | | Pliers | Head | Handles | Cutting capacities Ø Inch Ø mm | Ø Inch Ø mm | lbs |
|---|---|---|---|---|---|---|---|---|---|
| **09 08 240 US** | X | 9 1/2 240 | 1000 V ASTM | black atramentized | polished | insulated, multi-component handles, ASTM-tested | 3/16 4.6 | 1/8 3.0 | 1.02 |

## Insulation Strippers
IEC 60900 DIN EN 60900

11

> for single, multi and fine-stranded conductors with plastic or rubber insulation max. 13/64" (5.0 mm) dia., suitable for 8 AWG wire
> easy adjustment to the required diameter of solid or stranded wire with knurled screw and lock nut
> special tool steel; forged, oil-hardened




**11 08 160 SBA**
1000 V ASTM

**WARNING:** This product can expose you to chemicals including lead, which is known to the State of California to cause cancer. For more information go to

| Product Number | Packaging | ↔ Inch mm | | Pliers | Head | Handles | Stripping capacities Ø Inch Ø mm | Stripping capacities mm² | AWG | lbs |
|---|---|---|---|---|---|---|---|---|---|---|
| **11 08 160 SBA** | X | 6 1/4 160 | 1000 V ASTM | black atramentized | polished | insulated, multi-component grips, ASTM-tested | 13/64 5.0 | 10.0 | up to 8 | 0.40 |

## Installation Pliers 13

> to grip flat and round material, for bending, deburring, cutting cable,
> smooth surfaces near the tips grip single conductors without damaging them; serrated gripping surfaces and pipe grip for gripping flat and round material
> clear-cut outside edge on the jaw for working on flush-mounted junction boxes and deburring feed-through holes
> cable shears with induction hardened precision cutting edges
> slim dimensions for easy access in confined areas
> bolted joint: precise, zero-backlash operation of pliers
> high-grade special tool steel; forged, multi stage oil-hardened




**13 88 8 US**
1000 V ASTM

| Product Number | Packaging | ↔ Inch mm | | Pliers | Head | Handles | Cutting capacities Ø Inch | Cutting capacities AWG | Stripping capacities for cross-sections AWG | Crimping capacities AWG | lbs |
|---|---|---|---|---|---|---|---|---|---|---|---|
| **13 88 8 US** | X | 8 200 | 1000 V ASTM | black atramentized | polished | insulated, multi-component grips, ASTM-tested | 9/16 | 0 | 12 and 14 | 12 - 20 | 0.60 |

## Flat Nose Pliers 20
DIN ISO 5745 IEC 60900 DIN EN 60900

> flat, short, wide jaws
> serrated gripping surfaces
> chrome vanadium electric steel; forged, oil-hardened

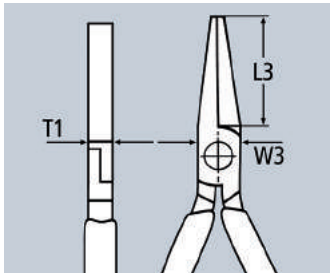





**20 06 160**
1000 V

| Product Number | Packaging | ↔ Inch mm | | Pliers | Handles | Dimensions L3 Inch mm | Dimensions W3 Inch mm | Dimensions T1 Inch mm | lbs |
|---|---|---|---|---|---|---|---|---|---|
| **20 06 160** | | 6 1/2 165 | 1000 V | chrome plated | insulated, multi-component grips, VDE-tested | 1 3/16 30.0 | 43/64 17.0 | 3/8 9.5 | 0.41 |

## Round Nose Pliers 22
DIN ISO 5745 IEC 60900 DIN EN 60900

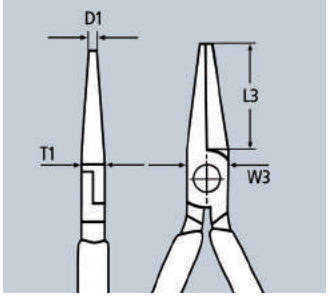




> for bending wire loops
> round, short jaws; smooth ground
> smooth tips
> special tool steel; forged, oil-hardened




**22 08 160 SBA**
1000 V ASTM

| Product Number | Packaging | ↔ Inch mm | | Pliers | Head | Handles | Dimensions L3 Inch mm | Dimensions W3 Inch mm | Dimensions D1 Inch mm | Dimensions T1 Inch mm | lbs |
|---|---|---|---|---|---|---|---|---|---|---|---|
| **22 08 160 SBA** | X | 6 1/4 160 | 1000 V ASTM | black atramentized | polished | insulated with multi-component grips, ASTM-tested | 1 3/16 30.0 | 45/64 18.0 | 1/8 3.0 | 3/8 9.5 | 0.40 |

## Snipe Nose Side Cutting Pliers

Radio Pliers, DIN ISO 5745 IEC 60900 DIN EN 60900

**25**

> suitable for fine gripping and cutting work
> pointed, half-round jaws
> serrated gripping surfaces
> cutting edges for soft, medium hard and hard wire
> induction hardened cutting edges, cutting edge hardness (approx. 61 HRC)
> vanadium steel; forged, multi stage oil-hardened




**25 08 160 SBA**

1000 V ASTM

| Product Number | Packaging | ↔ Inch mm | | Pliers | Head | Handles | Cutting capacities ◑ Ø Inch Ø mm | Cutting capacities ◕ Ø Inch Ø mm | Dimensions L3 Inch mm | W3 Inch mm | T1 Inch mm | W4 Inch mm | T2 Inch mm | lbs |
|---|---|---|---|---|---|---|---|---|---|---|---|---|---|---|
| **25 08 160 SBA** | X | 6 1/4 160 | 1000 V ASTM | black atramentized | polished | insulated, multi-component grips, ASTM-tested | 3/32 2.5 | 1/16 1.6 | 1 31/32 50.0 | 21/32 16.5 | 23/64 9.0 | 1/8 3.0 | 3/32 2.5 | 0.34 |

## Snipe Nose Side Cutting Pliers

Stork Beak Pliers

DIN ISO 5745 IEC 60900 DIN EN 60900

**26**

Elastic tips: stable even when twisted

> distortion-tolerant, flexible precision tips
> half-round, long, pointed jaws
> with hardened cutting edges (approx. 61 HRC) for soft, medium hard and hard wire
> vanadium steel; forged, multi-stage oil-hardened




**26 18 200 US**

1000 V ASTM

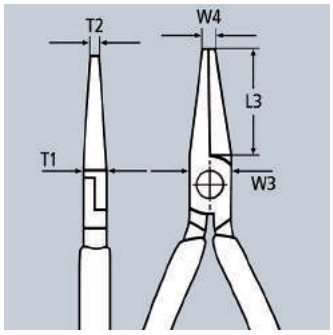


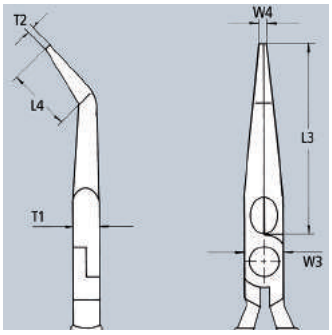





**26 28 200 SBA**

1000 V ASTM 40°

| Product Number | Packaging | ↔ Inch mm | | Pliers | Head | Handles | Cutting capacities ◑ Ø Inch Ø mm | Cutting capacities ◕ Ø Inch Ø mm | Dimensions L3 Inch mm | T1 Inch mm | W3 Inch mm | W4 Inch mm | T2 Inch mm | lbs |
|---|---|---|---|---|---|---|---|---|---|---|---|---|---|---|
| **26 18 200 US** | X | 8 200 | 1000 V ASTM | black atramentized | polished | insulated, multi-component grips, ASTM-tested | 1/8 3.2 | 3/32 2.2 | 2 7/8 73.0 | 3/8 9.5 | 45/64 18.0 | 1/8 3.0 | 3/32 2.5 | 0.45 |
| **26 28 200 SBA** | X | 8 200 | 1000 V ASTM 40° | black atramentized | polished | insulated, multi-component grips, ASTM-tested | 1/8 3.2 | 3/32 2.2 | 2 7/8 73.0 | 3/8 9.5 | 45/64 18.0 | 1/8 3.0 | 3/32 2.5 | 0.46 |

## Long Nose Pliers
DIN ISO 5745 IEC 60900 DIN EN 60900

**30**

> heavy-duty and hard-wearing gripping pliers
> different jaw styles for a wide range of applications
> chrome vanadium electric steel; forged, oil-hardened

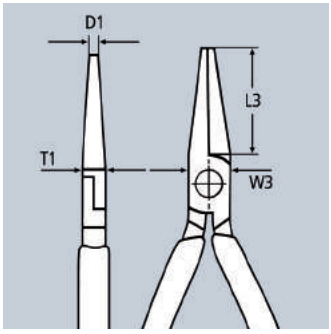


**Style 1**
Long, trapezoidal jaws; serrated gripping surfaces

**Style 3**
Long, round jaws; smooth gripping surfaces




**30 16 160**
1000 V




**30 36 160**
1000 V

| Product Number | Packaging | ↔ Inch mm | | Pliers | Handles | Style | Dimensions L3 Inch mm | W3 Inch mm | T1 Inch mm | W4 Inch mm | T2 Inch mm | lbs |
|---|---|---|---|---|---|---|---|---|---|---|---|---|
| **30 16 160** | | 6 1/4 160 | 1000 V | chrome plated | insulated, multi-component grips, VDE-tested | 1 | 1 53/64 46.5 | 21/32 16.5 | 3/8 9.5 | 1/8 3.0 | 13/64 5.0 | 0.33 |
| **30 36 160** | | 6 1/4 160 | 1000 V | chrome plated | insulated, multi-component grips, VDE-tested | 3 | 1 19/32 41.0 | 21/32 16.5 | 3/8 9.5 | 13/64 5.0 | 3/32 2.5 | 0.31 |

## Diagonal Cutters
DIN ISO 5749 IEC 60900 DIN EN 60900

**70**

> essential cutting tool for all-around use
> high-quality material and precise workmanship for long service life
> precision cutting edges for soft and hard wire
> clean cutting of thin copper wires even at the cutting edge tips
> induction hardened cutting edges (approx. 62 HRC)
> narrow head style for use in confined areas
> vanadium steel; forged, multi stage oil-hardened
> 70 26 160 has a strong precision rivet for smooth movement and 20% higher cutting force



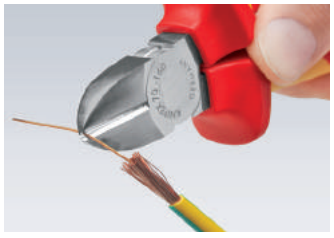

Slim head style and precise cutting capability are perfect for working in confined areas




**70 08 180 SBA**
1000 V ASTM




**70 26 160**
With elongated cutting edge
1000 V

| Product Number | Packaging | ↔ Inch mm | | Pliers | Head | Handles | Cutting capacities Ø Inch Ø mm | Ø Inch Ø mm | Ø Inch Ø mm | lbs |
|---|---|---|---|---|---|---|---|---|---|---|
| **70 08 160 SBA** | X | 6 1/4 160 | 1000 V ASTM | black atramentized | polished | insulated, multi-component handles, ASTM-tested | 5/32 4.0 | 1/8 3.2 | 5/64 2.0 | 0.49 |
| **70 08 180 SBA** | X | 7 1/4 180 | | | | | 5/32 4.0 | 1/8 3.0 | 3/32 2.5 | 0.58 |
| **70 26 160** | | 6 1/4 160 | 1000 V | chrome plated | | insulated, multi-component grips, VDE-tested | 5/32 4.0 | 1/8 3.0 | 5/64 2.0 | 0.51 |

## KNIPEX X-Cut®
Compact Diagonal Cutter
IEC 60900 DIN EN 60900

73




**73 06 160**
1000 V

### Powerful, light and universal

Cuts fine strands as well as multi-stranded cables and piano wires

> box-joint design: highest stability with low weight
> high cutting performance with minimum effort due to optimum coordination of the cutting edge angle and transmission ratio
> large opening width for thicker cables
> cuts all wires precisely, even fine copper wires
> double supported joint axis for heavy-duty work
> compact, lightweight construction
> universal usage in the assembly, maintenance and production
> chrome vanadium heavy-duty steel; forged, multi stage oil-hardened

X-Cut®

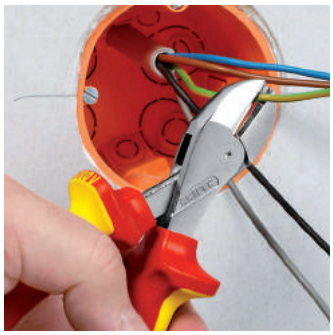



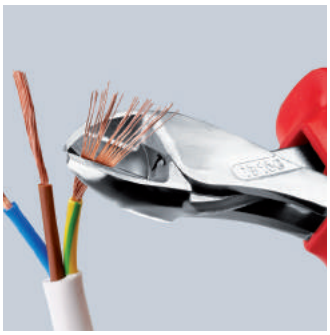

**40% less effort required**
compared with standard diagonal cutters of the same length with double mounted hinged joint.

| Product Number | Packaging | ↔ Inch mm | | Pliers | Handles | Cutting capacities Ø Inch Ø mm | Ø Inch Ø mm | Ø Inch Ø mm | Ø Inch Ø mm | Ø Inch Ø mm | lbs |
|---|---|---|---|---|---|---|---|---|---|---|---|
| **73 06 160** | | 6 1/4 160 | 1000 V | chrome plated | insulated, multi-component grips, VDE-tested | 3/16 4.8 | 5/32 3.8 | 7/64 2.7 | 3/32 2.2 | 15/32 12.0 | 0.41 |

## High Leverage Diagonal Cutters
DIN ISO 5749 IEC 60900 DIN EN 60900

74




**74 08 200 US**
1000 V ASTM

> forged-on axle for heavy-duty work
> for very tough, continuous use
> high cutting performance with minimum effort due to optimum coordination of the cutting edge angle and transmission ratio
> precision cutting edges induction hardened (approx. 64 HRC) cuts several types of wire including piano wire
> chrome vanadium heavy-duty steel; forged, multi stage oil-hardened

**78 08 250 SBA**
The 10" long diagonal cutter is suitable for copper conductors up to 16 mm² and aluminum conductors up to 35 mm²

**20% less effort required**
compared to conventional diagonal cutters of the same length, with forged-on joint axle.

| Product Number | Packaging | ↔ Inch mm | | Pliers | Head | Handles | Cutting capacities Ø Inch Ø mm | Ø Inch Ø mm | Ø Inch Ø mm | lbs |
|---|---|---|---|---|---|---|---|---|---|---|
| **74 08 200 US** | X | 8 200 | 1000 V ASTM | black atramentized | polished | insulated, multi-component handles, ASTM-tested | 11/64 4.2 | 1/8 3.0 | 3/32 2.5 | 0.68 |
| **74 08 250 US** | X | 10 250 | | | | | 3/16 4.6 | 9/64 3.5 | 1/8 3.0 | 1.04 |

## Pliers Wrench
insulated
IEC 60900 DIN EN 60900

**86 07**



Scale for setting the opening width off the workpiece (metric on the front and imperial on the back)

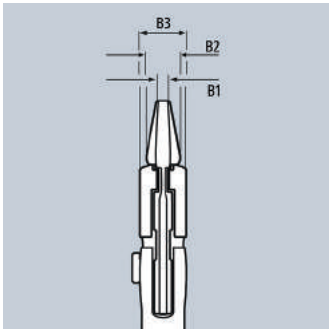


- pliers and a wrench in a single tool
- excellent for gripping, holding, pressing and bending applications
- zero backlash jaw surface pressure prevents damage to edges of sensitive components
- opening width lasered onto the pliers head for setting before putting the tool on the workpiece
- adjustment at the touch of a button directly on the workpiece
- parallel jaws allow infinitely variable gripping of all widths to the specified maximum size
- the action of the jaws allows bolted connections to be tightened and released quickly using the ratchet principle
- lever transmission greater than 10 - 1 for strong gripping power
- chrome vanadium electric steel; forged, oil-hardened



**86 06 250 US**
1000 V

| Product Number | Packaging | ↔ Inch mm | | Pliers | Handles | ⬡ Inch mm | Adjustment positions | Dimensions B1 Inch mm | B2 Inch mm | B3 Inch mm | ⚖ lbs |
|---|---|---|---|---|---|---|---|---|---|---|---|
| **86 06 250 US** | X | 10 250 | 1000 V | chrome plated | Insulated, multi-component grips, VDE-tested | 2 52 | 19 | 5/16 8 | 5 /16 8 | 35/64 14 | 1.14 |

## KNIPEX Alligator®
Water Pump Pliers
DIN ISO 8976 IEC 60900 DIN EN 60900

**88**

More output and comfort compared to conventional water pump pliers of the same length: offers 9 adjustment positions for 30% more gripping capacity

- good access to the workpiece due to slim size in the head and joint area
- self-locking on pipes and nuts: no slipping off the workpiece and low handforce required
- gripping surfaces with special hardened teeth, teeth hardness (approx. 61 HRC): low wear and reliable gripping
- box-joint design: high stability because of double guide
- pinch guard prevents operators´ fingers being pinched
- chrome vanadium electric steel; forged, multi stage oil-hardened



**88 07 300**
1000 V



**88 08 250 US**
1000 V ASTM

| Product Number | Packaging | ↔ Inch mm | | Pliers | Head | Handles | ○ Ø Inch Ø mm | ⬡ Inch mm | Adjustment positions | ⚖ lbs |
|---|---|---|---|---|---|---|---|---|---|---|
| **88 07 300** | X | 12 300 | 1000 V | chrome plated | chrome plated | plastic dipped insulated, VDE-tested | 2 3/4 70 | 2 3/64 60 | 9 | 1.46 |
| **88 08 250 US** | X | 10 250 | 1000 V ASTM | black atramentized | polished | insulated, multi-component handles, ASTM-tested | 1 31/32 50 | 1 13/16 46 | 9 | 0.87 |

# KNIPEX Cobra®

High-Tech Water Pump Pliers, insulated

DIN ISO 8976 IEC 60900 DIN EN 60900

**87 26**

- adjustment by shifting the jaw directly on to the workpiece: fast, secure and comfortable handling
- opening at the touch of a button apart from the workpiece
- fine adjustment for optimum adaptation to different workpiece sizes and comfortable gripping position
- good access to the workpiece due to slim size in the head and joint area
- self-locking on pipes and nuts: no slipping off the workpiece and low handforce required
- gripping surfaces with special hardened teeth, teeth hardness (approx. 61 HRC): low wear and reliable gripping
- box-joint design: high stability because of double guide
- pinch guard prevents operators´ fingers being pinched
- chrome vanadium electric steel; forged, multi stage oil-hardened




**87 28 250 US**

1000 V ASTM

The adjustment action to adapt to the workpiece is easy and reliable with the KNIPEX Cobra®: place the upper gripping jaw of the opened pliers on the workpiece, push pliers to close, done!





Quick adjustment to the workpiece without using a push-button



Just push the pliers handle to adjust

| Product Number | Packaging | ↔ Inch mm | | Pliers | Head | Handles | ○ Ø Inch | ○ Ø Inch Ø mm | ⬡ Inch mm | Adjustment positions | ⚖ lbs |
|---|---|---|---|---|---|---|---|---|---|---|---|
| **87 28 250 US** | X | 10 250 | 1000 V ASTM | grey atramentized | polished | insulated, multi-component grips, ASTM-tested | 2 | 1 31/32 50 | 1 13/16 46 | 24 | 0.88 |

# Precision Tweezers
IEC 60900 DIN EN 60900

**92**

> insulated and tested according to IEC 60900
> plastic dipped insulated
> chrome plated
> spring steel, high-strength

**92 27 61**
For ultra fine mounting work; extra fine tips; straight tips; gripping surfaces matte finish for optimum grip

**92 27 62**
Straight tips; gripping surfaces with fine transverse serration

**92 37 64**
Bent tips; gripping surfaces with fine transverse serration

**92 67 63**
Straight tips; serrated gripping surfaces




**92 27 61**
1000 V




**92 27 62**
1000 V




**92 37 64**
1000 V 45°




**92 67 63**
1000 V

| Product Number | Packaging | ↔ Inch mm | | Finish | ⚖ lbs |
|---|---|---|---|---|---|
| **92 27 61** | | 5 1/8<br>130 | 1000 V | plastic dipped insulated, VDE-tested | 0.07 |
| **92 27 62** | | 6<br>150 | 1000 V | plastic dipped insulated, VDE-tested | 0.08 |
| **92 37 64** | | 6<br>150 | 1000 V 45° | plastic dipped insulated, VDE-tested | 0.08 |
| **92 67 63** | | 5 3/4<br>145 | 1000 V | plastic dipped insulated, VDE-tested | 0.10 |

# Cable Shears
IEC 60900 DIN EN 60900

**95**
**0**

> for cutting copper and aluminum cables
> not suitable for steel wire and hard drawn copper conductors
> precision ground, hardened blades
> no crushing, slight deformation of the cable only
> with pinch guard and slip guard
> adjustable bolted joint
> shears body: surgical steel, stainless, vacuum-hardened
> handles: plastic, impact-resistant

**95 06 230**
For copper conductors single wire up to 5/8" (16 mm²), multi-stranded wire up to 1/0 AWG (50 mm²), fine stranded up to 70 mm² and aluminum conductors multi-stranded wire up to 70 mm²; Easy cutting with one-hand operation due to high transmission ratio; stainless – surgical grade – steel; oil-hardened and tempered




**95 06 230**
1000 V

| Product Number | Packaging | ↔ Inch mm | | Head | Handles | Cutting capacities Ø Inch Ø mm | Cutting capacities mm² | AWG | ⚖ lbs |
|---|---|---|---|---|---|---|---|---|---|
| **95 06 230** | | 9 1/4<br>230 | 1000 V | polished | plastic insulated, VDE-tested | 5/8<br>16 | 50 | Solid - 1/0<br>Stranded - 2/0 | 0.60 |

## Cable Shears
IEC 60900 DIN EN 60900

**95 1**



Cut performed with a Diagonal Cutter: high effort required, inaccurate cut, considerable deforming and crushing of the cable.



Cut performed with a Cable Shear: easy, clean cut without any deformation of the cable.

- for cutting copper and aluminum cables, single and multi-stranded wires
- not suitable for steel wire and hard drawn copper conductors
- precision ground, hardened blades
- clean and smooth cut without crushing and deformation
- easy cutting with one-hand operation
- pinch guard prevents operators´ fingers being pinched
- adjustable bolted joint, self-locking
- high-grade special tool steel; forged, oil-hardened




**95 18 165 US**
1000 V ASTM

| Product Number | Packaging | ↔ Inch mm | | Tool | Handles | Cutting capacities Ø Inch Ø mm | mm² | AWG | lbs |
|---|---|---|---|---|---|---|---|---|---|
| **95 18 165 US** | X | 6 1/2 165 | 1000 V ASTM | burnished | insulated, multi-component grips, ASTM-tested | 19/32 15 | 50 | 1/0 | 0.58 |

## Cable Shears
with twin cutting edge
IEC 60900 DIN EN 60900

**95 1**



Initial cut: using the front cutting edge to cut the insulating sheath on larger cable diameters leaves an ergonomic handle opening width.



Final cut: after cutting the sheath in the front profile the conductors are cut in the rear area.

- for cutting copper and aluminum cables
- not suitable for steel wire and hard drawn copper conductors
- precision ground, hardened blades
- clean and smooth cut without crushing and deformation
- easy cutting with one-hand operation
- by dividing the cutting actions into initial cut (insulating sheath in the front cutting area) and final cut (conductor in the back cutting area),cables up to 25/32" (20 mm) dia. can be cut in one-hand operation
- less effort required due to favorable lever ratio and special blade geometry
- pinch guard prevents operators´ fingers being pinched
- adjustable bolted joint, self-locking
- high-grade special tool steel; forged, oil-hardened




**95 18 200 SBA**
1000 V ASTM PATENTED

| Product Number | Packaging | ↔ Inch mm | | Tool | Handles | Cutting capacities Ø Inch Ø mm | mm² | AWG | lbs |
|---|---|---|---|---|---|---|---|---|---|
| **95 18 200 SBA** | X | 8 200 | 1000 V ASTM | burnished | insulated, multi-component grips, ASTM-tested | 25/32 20 | 70 | 2/0 | 0.75 |

## Cable Shears
IEC 60900 DIN EN 60900

**95 1**



Large cutting capacity: max. 1 1/16" (27 mm) dia./150 m²

### Short design, length only 20" (500 mm)
### Lightweight, high leverage

> insulated and tested according to IEC 60900 and ASTM F1505
> for cutting copper and aluminum cables, single and multi-stranded wires
> not suitable for steel wire and wire ropes
> precision ground, hardened blades
> clean and smooth cut without crushing and deformation
> less effort required due to favorable lever ratio and optimized cutting edge geometry
> pinch guard prevents operators´ fingers being pinched
> adjustable bolted joint
> cutter head: vanadium electric steel; forged, oil-hardened
> handle shank: aluminum tube, high-strength



**95 17 500**
1000 V

| Product Number | Packaging | Inch / mm | | Head | Handles | Cutting capacities Ø Inch / Ø mm | Cutting capacities mm² | AWG | lbs |
|---|---|---|---|---|---|---|---|---|---|
| **95 17 500** | | 20 / 500 | 1000 V | burnished | plastic dipped insulated, VDE-tested | 1 1/16 / 27 | 150 | 5/0 | 3.26 |

## Cable Shears
IEC 60900 DIN EN 60900

**95 2**

> for cutting copper and aluminum cables, single and multi-stranded wires
> not suitable for steel wire and wire ropes
> precision ground, hardened blades
> clean and smooth cut without crushing and deformation
> favorable lever ratio due to toggle lever
> pinch guard prevents operators´ fingers being pinched
> adjustable bolted joint
> bolted cutter head, replaceable
> blade head: high-grade chrome vanadium electric steel; forged, oil-hardened
> handle: steel tube



**95 27 600**
1000 V

| Product Number | Packaging | Inch / mm | | Head | Handles | Cutting capacities Ø Inch / Ø mm | Cutting capacities mm² | AWG | lbs |
|---|---|---|---|---|---|---|---|---|---|
| **95 27 600** | | 23 1/2 / 600 | 1000 V | polished | plastic dipped insulated, VDE-tested | 1 1/16 / 27 | 150 | 5/0 | 5.08 |

| | |
|---|---|
| **95 29 600** | Spare cutter head for 95 27 600 |

# Cable Cutters

with ratchet action

IEC 60900 DIN EN 60900

95
3

- for cutting copper and aluminum cables, single and multi-stranded wires
- not suitable for steel wire and wire ropes
- precision ground, hardened blades
- clean and smooth cut without crushing and deformation
- one-hand operation using ratchet principle
- minimal handforce required due to very high transmission ratio
- two-stage ratchet drive for easy cutting
- simple handling as a result of lightweight and compact design – can be used even in confined areas
- pinch guard prevents operators´ fingers being pinched
- high-grade special tool steel; forged, oil-hardened





Ratchet principle and two-stage ratchet drive for easier cutting



**95 36 250 SBA**

1000 V

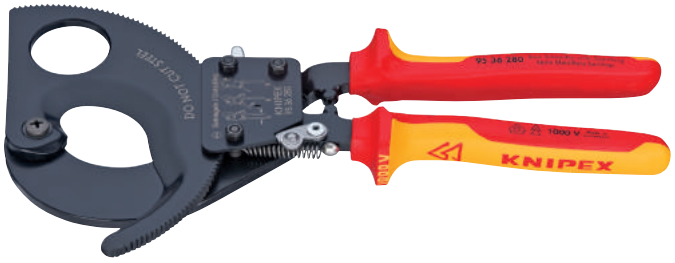

**95 36 280 SBA**

1000 V

| Product Number | Packaging | ↔ Inch mm | | Tool | Handles | Cutting capacities Ø Inch Ø mm | mm² | MCM | lbs |
|---|---|---|---|---|---|---|---|---|---|
| **95 36 250 SBA** | X | 10 250 | 1000 V | black lacquered | insulated, multi-component grips, VDE-tested | 1 1/4 32 | 240 | 500 | 1.24 |
| **95 36 280 SBA** | X | 11 280 | 1000 V | black lacquered | insulated, multi-component grips, VDE-tested | 2 3/64 52 | 380 | 750 | 1.64 |



# Cable Cutter

ratchet principle, 3-stage
IEC 60900 DIN EN 60900

95
3



**95 36 320**
1000 V

## Sturdy. Easy to use.
## Innovative ratchet-drive.

> insulated and tested according to IEC 60900 and ASTM F1505
> easy handling due to lightweight (1.82 lbs) and compact construction 12 1/2" (320 mm) length – usable in confined areas
> cuts through copper and aluminum cables with diameters of up to 2 23/64" (60 mm) in one-hand and two-handed operations
> hardened cutting edges, precisely ground, cut smoothly and neatly without crushing
> for cutting copper and aluminum single conductors as well as multi-stranded cables (not suitable for steel wire and wire ropes)
> innovative 3-stage ratchet-drive with high leverage for easy cutting in one-hand and two-handed operation
> fixed handle with support area for laying down the pliers when cutting
> high-grade special tool steel; forged, oil-hardened





| Product Number | Packaging | ↔ Inch mm | | Tool | Handles | Cutting capacities Ø Inch Ø mm | mm² | MCM | ⚖ lbs |
|---|---|---|---|---|---|---|---|---|---|
| **95 36 320** | | 12 1/2 320 | 1000 V | black atramentized | insulated, multi-component grips, VDE-tested | 2 3/64 60 | 600 | 1200 | 1.83 |

| | |
|---|---|
| **95 39 320 01** | Pivot cutter repair kit for 95 36 320 |
| **95 39 320 02** | Fixed cutter repair kit for 95 36 320 |



## Cable Cutters for Wire Rope and ACSR

IEC 60900 DIN EN 60900

95 7

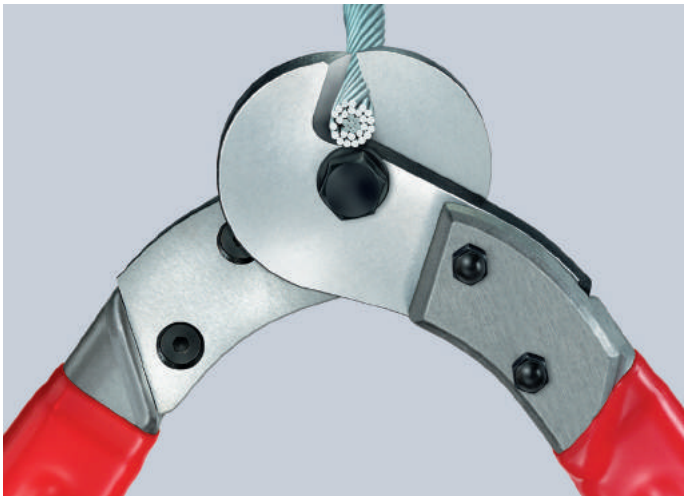

> for ACSR, wire ropes, steel rods, copper and aluminum cables
> suitable for cutting overhead line cables with strain relief wire
> angular cutting blades prevent fanning out
> optimum transmission ratio for high cutting performance
> bolted cutter head, replaceable
> lightweight
> cutter head: high-grade special tool steel, multi stage oil-hardened
> handles: aluminum, high-strength



**95 77 600**

1000 V

| Product Number | Packaging | ↔ Inch mm | | Head | Handles | Cutting capacities mm² | Ø Inch Ø mm | Ø Inch Ø mm | AWG | lbs |
|---|---|---|---|---|---|---|---|---|---|---|
| **95 77 600** | | 23 5/8 600 | 1000 V | polished | plastic dipped insulated | 150 | 35/64 14 | 23/64 9 | 5/0 | 5.02 |
| **95 79 600** | Spare cutter head for 95 77 600 | | | | | | | | | |

## Crimping Pliers

for wire ferrules (end sleeves)

IEC 60900 DIN EN 60900

97 68

> for crimping wire end ferrules according to DIN 46228 parts 1 and 4 in an area of application from 24 - 14 AWG (0.25 up to 2.5 mm²)
> crimping in marked trapezoidal dies for tight connections between the sleeve and the conductor
> vanadium electric steel; forged, oil-hardened




**97 68 145 A**

1000 V

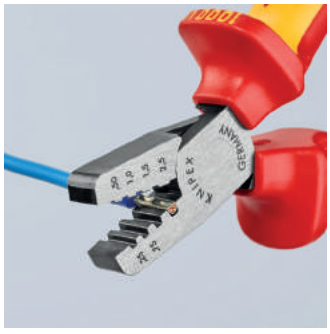

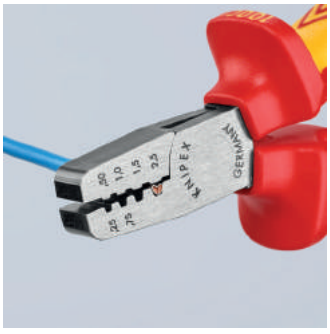

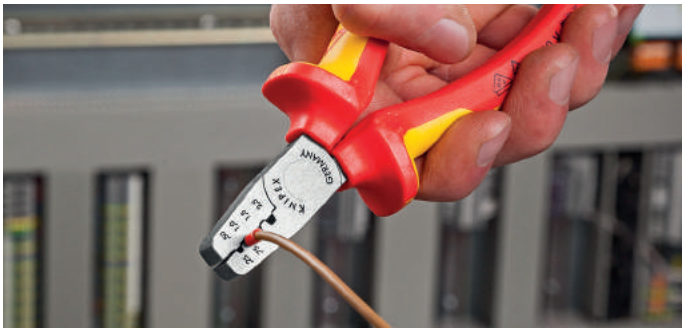

| Product Number | Packaging | ↔ Inch mm | | | Head | Handles | Capacity mm² | AWG | Number of crimping positions | lbs |
|---|---|---|---|---|---|---|---|---|---|---|
| **97 68 145 A** | | 5 3/4 145 | | 1000 V | polished | insulated, multi-component grips, VDE-tested | 0.25 - 2.5 | 24 - 14 | 4 | 0.41 |

# Open End Wrenches

IEC 60900 DIN EN 60900

**98 0**

> jaw 15° angled
> chrome plated
> chrome vanadium steel; forged, oil-hardened

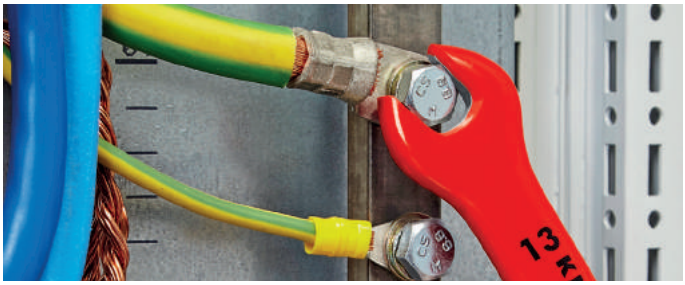




98 00 14

1000 V

Metric Versions

| Product Number | Packaging | | Length l max. Inch mm | Width across flats S Inch mm | Head width b max. Inch mm | Head thickness a max. Inch mm | lbs |
|---|---|---|---|---|---|---|---|
| **98 00 07** | | 1000 V | 4 1/8<br>105.0 | 7.0 | 25/32<br>20.0 | 5/32<br>4.0 | 0.06 |
| **98 00 08** | | | 4 1/8<br>105.0 | 8.0 | 55/64<br>22.0 | 5/32<br>4.0 | 0.07 |
| **98 00 09** | | | 4 1/8<br>105.0 | 9.0 | 15/16<br>24.0 | 5/32<br>4.0 | 0.08 |
| **98 00 10** | | | 4 1/8<br>105.0 | 10.0 | 1 1/16<br>27.0 | 13/64<br>5.0 | 0.11 |
| **98 00 11** | | | 4 3/4<br>120.0 | 11.0 | 1 3/16<br>30.0 | 7/32<br>5.5 | 0.12 |
| **98 00 12** | | | 5<br>125.0 | 12.0 | 1 1/4<br>32.0 | 7/32<br>5.5 | 0.15 |
| **98 00 13** | | | 5 1/8<br>130.0 | 13.0 | 1 11/32<br>34.0 | 1/4<br>6.5 | 0.15 |
| **98 00 14** | | | 5 1/4<br>135.0 | 14.0 | 1 3/8<br>35.0 | 1/4<br>6.5 | 0.14 |
| **98 00 15** | | | 5 3/4<br>145.0 | 15.0 | 1 29/64<br>37.0 | 9/32<br>7.0 | 0.20 |
| **98 00 16** | | | 6 7/64<br>155.0 | 16.0 | 1 1/2<br>38.0 | 9/32<br>7.0 | 0.25 |
| **98 00 17** | | | 6 7/64<br>155.0 | 17.0 | 1 21/32<br>42.0 | 5/16<br>8.0 | 0.26 |
| **98 00 18** | | | 6 1/4<br>160.0 | 18.0 | 1 3/4<br>44.0 | 5/16<br>8.0 | 0.33 |
| **98 00 19** | | | 6 1/2<br>165.0 | 19.0 | 1 27/32<br>47.0 | 23/64<br>9.0 | 0.31 |
| **98 00 22** | | | 7 1/2<br>190.0 | 22.0 | 2 3/64<br>52.0 | 23/64<br>9.0 | 0.48 |
| **98 00 24** | | | 8 1/4<br>210.0 | 24.0 | 2 13/64<br>56.0 | 23/64<br>9.0 | 0.54 |
| **98 00 27** | | | 8 1/2<br>215.0 | 27.0 | 2 31/64<br>63.0 | 23/64<br>9.0 | 0.70 |

Imperial Versions

| Product Number | Packaging | | Length l max. Inch mm | Width across flats S Inch mm | Head width b max. Inch mm | Head thickness a max. Inch mm | lbs |
|---|---|---|---|---|---|---|---|
| **98 00 3/4"** | | 1000 V | 7 1/2<br>190.5 | 3/4 | 1 27/32<br>47.0 | 23/64<br>9.0 | 0.34 |
| **98 00 3/8"** | | | 4 1/4<br>108.0 | 3/8 | 1 1/16<br>27.0 | 13/64<br>5.0 | 0.09 |
| **98 00 5/16"** | | | 4 1/4<br>108.0 | 5/16 | 55/64<br>22.0 | 5/32<br>4.0 | 0.09 |
| **98 00 5/8"** | | | 6 1/2<br>165.1 | 5/8 | 1 1/2<br>38.0 | 9/32<br>7.0 | 0.26 |
| **98 00 7/16"** | | | 4 3/4<br>120.7 | 7/16 | 1 3/16<br>30.0 | 7/32<br>5.5 | 0.11 |
| **98 00 9/16"** | | | 6<br>152.4 | 9/16 | 1 3/8<br>35.0 | 1/4<br>6.5 | 0.21 |
| **98 00 1/2"** | | | 5 1/2<br>139.7 | 1/2 | 1 11/32<br>34.0 | 1/4<br>6.5 | 0.18 |
| **98 00 1/4"** | | | 4 1/4<br>108.0 | 1/4 | 25/32<br>20.0 | 5/32<br>4.0 | 0.08 |

# Adjustable Wrench

IEC 60900 DIN EN 60900

**98**
**07**

> parallel smooth gripping jaws
> adjustable gripping width
> with scaling for presetting the width apart from the workpiece
> chrome vanadium steel




**98 07 250**
1000 V 22°

| Product Number | Packaging | ↔ Inch mm | | Tool | Handle | ⬡ Inch mm | Jaw width Inch mm | Head width Inch mm | Width Inch mm | Depth Inch mm | ⚖ lbs |
|---|---|---|---|---|---|---|---|---|---|---|---|
| **98 07 250** | | 10 1/4 260 | 1000 V 22° ⬡ | chrome plated | plastic dipped insulated, VDE-tested | 1 3/16 30 | 5/16 8.0 | 5/8 16.0 | 2 7/8 73.0 | 25/32 20.0 | 1.2 |



# Box Wrenches
IEC 60900 DIN EN 60900

**98 0**

> cranked
> chrome plated
> chrome vanadium steel; forged, oil-hardened




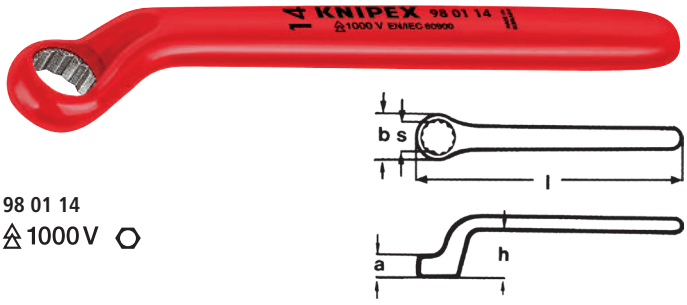


**98 01 14**
1000 V

Metric Versions

| Product Number | Packaging | | Length l max. Inch mm | Width across flats S Inch mm | Head width b max. Inch mm | Head thickness a max. Inch mm | Depth of crank h max. Inch mm | lbs |
|---|---|---|---|---|---|---|---|---|
| **98 01 07** | | 1000 V | 6<br>150.0 | 7.0 | 15/32<br>12.0 | 9/32<br>7.0 | 45/64<br>18.0 | 0.13 |
| **98 01 08** | | | 6 7/64<br>155.0 | 8.0 | 35/64<br>14.0 | 9/32<br>7.0 | 3/4<br>19.0 | 0.13 |
| **98 01 09** | | | 6 1/2<br>165.0 | 9.0 | 39/64<br>15.5 | 5/16<br>8.0 | 3/4<br>19.0 | 0.17 |
| **98 01 10** | | | 6 1/4<br>160.0 | 10.0 | 43/64<br>17.0 | 23/64<br>9.0 | 25/32<br>20.0 | 0.17 |
| **98 01 11** | | | 6 1/2<br>165.0 | 11.0 | 47/64<br>18.5 | 25/64<br>10.0 | 53/64<br>21.0 | 0.19 |
| **98 01 12** | | | 7 1/4<br>185.0 | 12.0 | 47/64<br>18.5 | 25/64<br>10.0 | 29/32<br>23.0 | 0.24 |
| **98 01 13** | | | 7 1/4<br>185.0 | 13.0 | 53/64<br>21.5 | 7/16<br>11.0 | 29/32<br>23.0 | 0.25 |
| **98 01 14** | | | 7 1/2<br>195.0 | 14.0 | 29/32<br>23.0 | 15/32<br>12.0 | 15/16<br>24.0 | 0.30 |
| **98 01 15** | | | 8<br>200.0 | 15.0 | 15/16<br>24.0 | 15/32<br>12.0 | 15/16<br>24.0 | 0.34 |
| **98 01 16** | | | 8<br>200.0 | 16.0 | 1 1/32<br>26.0 | 15/32<br>12.0 | 1 1/32<br>26.0 | 0.38 |
| **98 01 17** | | | 8<br>205.0 | 17.0 | 1 1/16<br>27.0 | 1/2<br>13.0 | 1 1/32<br>26.0 | 0.38 |
| **98 01 18** | | | 8 1/4<br>210.0 | 18.0 | 1 9/64<br>29.0 | 1/2<br>13.0 | 1 7/64<br>28.0 | 0.53 |
| **98 01 19** | | | 8 3/4<br>225.0 | 19.0 | 1 3/16<br>30.0 | 35/64<br>14.0 | 1 7/64<br>28.0 | 0.54 |
| **98 01 22** | | | 8 3/4<br>225.0 | 22.0 | 1 3/8<br>35.0 | 19/32<br>15.0 | 1 3/16<br>30.0 | 0.61 |

Imperial Versions

| Product Number | Packaging | | Length l max. Inch mm | Width across flats S Inch mm | Head width b max. Inch mm | Head thickness a max. Inch mm | Depth of crank h max. Inch mm | lbs |
|---|---|---|---|---|---|---|---|---|
| **98 01 1 1/16"** | | 1000 V | 10 7/16<br>265.0 | 1 1/16 | 1 1/2<br>38.0 | 5/8<br>16.0 | 1 3/16<br>30.0 | 1.21 |
| **98 01 11/16"** | | | 8<br>205.0 | 11/16 | 1 1/16<br>27.0 | 1/2<br>13.0 | 1 1/32<br>26.0 | 0.41 |
| **98 01 3/4"** | | | 8 3/4<br>225.0 | 3/4 | 1 3/16<br>30.0 | 35/64<br>14.0 | 1 7/64<br>28.0 | 0.55 |
| **98 01 5/16"** | | | 6 7/64<br>155.0 | 5/16 | 35/64<br>14.0 | 9/32<br>7.0 | 3/4<br>19.0 | 0.15 |
| **98 01 5/8"** | | | 8<br>200.0 | 5/8 | 1 1/32<br>26.0 | 15/32<br>12.0 | 1 1/32<br>26.0 | 0.45 |
| **98 01 7/8"** | | | 8 3/4<br>225.0 | 7/8 | 1 3/8<br>35.0 | 19/32<br>15.0 | 1 3/16<br>30.0 | 0.70 |
| **98 01 9/16"** | | | 7 1/2<br>195.0 | 9/16 | 29/32<br>23.0 | 15/32<br>12.0 | 15/16<br>24.0 | 0.36 |

# Nut Drivers

with T-Handle

IEC 60900 DIN EN 60900

**98**
**0**

> special tool steel, oil-hardened




**98 04 13**
1000 V



**98 05 13**
1000 V

| Product Number | Packaging | ↔ Inch mm | | Width across flats S mm | Handle length Inch mm | Head dia. Inch mm | ⚖ lbs |
|---|---|---|---|---|---|---|---|
| **98 04 10** | | 8<br>200 | | 10.0 | 6 7/64<br>155 | 3/4<br>19.5 | 0.80 |
| **98 04 13** | | 8<br>200 | | 13.0 | 6 7/64<br>155 | 59/64<br>23.5 | 0.81 |
| **98 04 17** | | 8<br>200 | 1000 V | 17.0 | 6 7/64<br>155 | 1 1/8<br>28.5 | 1.06 |
| **98 04 19** | | 8<br>200 | | 19.0 | 6 7/64<br>155 | 1 7/32<br>31.0 | 1.31 |
| **98 04 22** | | 8<br>200 | | 22.0 | 6 7/64<br>155 | 1 23/64<br>34.5 | 1.42 |
| **98 05 13** | | 12<br>300 | | 13.0 | 6 7/64<br>155 | 59/64<br>23.5 | 0.94 |
| **98 05 17** | | 12<br>300 | 1000 V | 17.0 | 6 7/64<br>155 | 1 1/8<br>28.5 | 1.24 |
| **98 05 19** | | 12<br>300 | | 19.0 | 6 7/64<br>155 | 1 7/32<br>31.0 | 1.56 |

# Screwdrivers for Hexagon Socket Screws

with T-Handle

IEC 60900 DIN EN 60900

**98**
**1**

> special tool steel, oil-hardened




**98 14 08**
1000 V




**98 15 08**
1000 V

S

| Product Number | Packaging | ↔ Inch mm | | Width across flats S mm | Length of non-insulated blade ± 2 Inch mm | T-Handle width Inch mm | ⚖ lbs |
|---|---|---|---|---|---|---|---|
| **98 14 05** | | 4 3/4<br>120 | | 5.0 | 23/64<br>9.0 | 3 1/2<br>90.0 | 0.49 |
| **98 14 06** | | 4 3/4<br>120 | 1000 V | 6.0 | 25/64<br>10.0 | 3 1/2<br>90.0 | 0.46 |
| **98 14 08** | | 4 3/4<br>120 | | 8.0 | 7/16<br>11.0 | 3 1/2<br>90.0 | 0.63 |
| **98 15 05** | | 10<br>250 | | 5.0 | 23/64<br>9.0 | 3 1/2<br>90.0 | 0.80 |
| **98 15 06** | | 10<br>250 | 1000 V | 6.0 | 25/64<br>10.0 | 3 1/2<br>90.0 | 1.00 |
| **98 15 08** | | 10<br>250 | | 8.0 | 7/16<br>11.0 | 3 1/2<br>90.0 | 0.79 |

# T-handle

with driving square 3/8" or 1/2"

IEC 60900 DIN EN 60900

**98**
**40**

> for use with sockets
> for quick, easy and secure locking of attached sockets
> chrome plated
> high-grade special tool steel; forged, oil-hardened







**98 40**
1000 V ½"

| Product Number | Packaging | ↔ Inch mm | | Handle length Inch mm | Square drive Inch | ⚖ lbs |
|---|---|---|---|---|---|---|
| **98 30** | | 8<br>200 | 1000 V ⅜ | 6 1/2<br>165 | 3/8 | 0.91 |
| **98 40** | | 8<br>200 | 1000 V ½ | 6 1/2<br>165 | 1/2 | 1.34 |

## Reversible Ratchets

with driving square 3/8" or 1/2"
IEC 60900 DIN EN 60900

98

> for use with sockets
> reversible for clockwise and counterclockwise directions
> extremely smooth action
> for quick, easy and secure locking of attached sockets
> chrome vanadium steel; forged



**98 31**
1000 V 3/8"

| Product Number | Packaging | ↔ Inch mm | | Square drive Inch | ⚖ lbs |
|---|---|---|---|---|---|
| **98 31** | | 7 1/2 190 | 1000 V 3/8" | 3/8 | 0.71 |
| **98 41** | | 10 7/16 265 | 1000 V 1/2" | 1/2 | 1.38 |

## Extension Bars

with internal and external driving square 3/8" or 1/2"
IEC 60900 DIN EN 60900

98

> for use with sockets
> with internal and external square
> for quick, easy and secure locking of attached sockets
> chrome vanadium steel, forged




**98 35 125**
1000 V 3/8" 3/8




**98 45 250**
1000 V 1/2" 1/2

| Product Number | Packaging | ↔ Inch mm | | Square drive Inch | ⚖ lbs |
|---|---|---|---|---|---|
| **98 35 125** | | 5 125 | 1000 V 3/8" 3/8 | 3/8 | 0.33 |
| **98 35 250** | | 10 250 | | 3/8 | 0.62 |
| **98 45 125** | | 5 125 | 1000 V 1/2" 1/2 | 1/2 | 0.57 |
| **98 45 250** | | 10 250 | | 1/2 | 1.08 |

# Hexagon Sockets
# for hexagonal screws

for internal square 3/8" or 1/2"

IEC 60900 DIN EN 60900

98

> for metric hexagonal head screws
> chrome plated
> chrome vanadium steel




**98 37 17**

1000 V 3/8




**98 47 17**

1000 V 1/2




| Product Number | Packaging | ↔ Inch mm | | Width across flats S Inch mm | dia. of effective tool side d max. Inch mm | Square drive Inch | ⚖ lbs |
|---|---|---|---|---|---|---|---|
| **98 37 10** | | 1 21/32 42 | 1000 V 3/8 | 25/64 10.0 | 47/64 18.7 | 3/8 | 0.07 |
| **98 37 11** | | 1 21/32 43 | | 7/16 11.0 | 25/32 20.0 | 3/8 | 0.08 |
| **98 37 12** | | 1 3/4 44 | | 15/32 12.0 | 53/64 21.2 | 3/8 | 0.09 |
| **98 37 13** | | 1 49/64 45 | | 1/2 13.0 | 57/64 22.5 | 3/8 | 0.09 |
| **98 37 14** | | 1 13/16 46 | | 35/64 14.0 | 15/16 23.7 | 3/8 | 0.10 |
| **98 37 16** | | 1 13/16 46 | | 5/8 16.0 | 1 1/32 26.2 | 3/8 | 0.12 |
| **98 37 17** | | 1 13/16 46 | | 43/64 17.0 | 1 5/64 27.5 | 3/8 | 0.12 |
| **98 37 19** | | 1 59/64 49 | | 3/4 19.0 | 1 3/16 30.0 | 3/8 | 0.14 |
| **98 47 10** | | 2 1/8 54 | 1000 V 1/2 | 25/64 10.0 | 3/4 19.5 | 1/2 | 0.14 |
| **98 47 11** | | 2 1/8 54 | | 7/16 11.0 | 13/16 20.7 | 1/2 | 0.15 |
| **98 47 12** | | 2 11/64 55 | | 15/32 12.0 | 29/32 23.0 | 1/2 | 0.14 |
| **98 47 13** | | 2 11/64 55 | | 1/2 13.0 | 29/32 23.2 | 1/2 | 0.15 |
| **98 47 14** | | 2 11/64 55 | | 35/64 14.0 | 31/32 24.5 | 1/2 | 0.16 |
| **98 47 16** | | 2 11/64 55 | | 5/8 16.0 | 1 1/16 26.9 | 1/2 | 0.19 |
| **98 47 17** | | 2 11/64 55 | | 43/64 17.0 | 1 7/64 28.2 | 1/2 | 0.18 |
| **98 47 18** | | 2 11/64 55 | | 45/64 18.0 | 1 9/64 29.0 | 1/2 | 0.19 |
| **98 47 19** | | 2 1/8 54 | | 3/4 19.0 | 1 13/64 30.7 | 1/2 | 0.22 |
| **98 47 22** | | 2 9/32 58 | | 55/64 22.0 | 1 23/64 34.5 | 1/2 | 0.28 |
| **98 47 24** | | 2 13/32 61 | | 15/16 24.0 | 1 29/64 37.0 | 1/2 | 0.34 |
| **98 47 27** | | 2 31/64 63 | | 1 1/16 27.0 | 1 19/32 41.0 | 1/2 | 0.42 |

# Sockets
for internal square 3/8" or 1/2"
IEC 60900 DIN EN 60900

98

> 12 points of contact
> for imperial hexagonal head screws
> chrome plated
> chrome vanadium steel




**98 47 1/2"**
1000 V




| Product Number | Packaging | ↔ Inch mm | | Width across flats S Inch | dia. of effective tool side d max. Inch | Square drive Inch | ⚖ lbs |
|---|---|---|---|---|---|---|---|
| **98 37 1/2"** | | 1 49/64 45 | | 1/2 | 57/64 | 3/8 | 0.09 |
| **98 37 3/4"** | | 1 59/64 49 | | 3/4 | 1 3/16 | 3/8 | 0.14 |
| **98 37 3/8"** | | 1 21/32 42 | | 3/8 | 47/64 | 3/8 | 0.07 |
| **98 37 5/16"** | | 1 21/32 42 | 1000 V | 5/16 | 5/8 | 3/8 | 0.07 |
| **98 37 5/8"** | | 1 13/16 46 | | 5/8 | 1 1/32 | 3/8 | 0.11 |
| **98 37 7/16"** | | 1 11/16 43 | | 7/16 | 25/32 | 3/8 | 0.08 |
| **98 37 9/16"** | | 1 27/32 47 | | 9/16 | 15/16 | 3/8 | 0.09 |
| **98 47 1"** | | 2 13/32 61 | | 1 | 1 19/32 | 1/2 | 0.38 |
| **98 47 1/2"** | | 2 11/64 55 | | 1/2 | 29/32 | 1/2 | 0.15 |
| **98 47 11/16"** | | 2 11/64 55 | | 11/16 | 1 7/64 | 1/2 | 0.18 |
| **98 47 3/4"** | | 2 11/64 55 | 1000 V | 3/4 | 1 13/64 | 1/2 | 0.19 |
| **98 47 5/8"** | | 2 11/64 55 | | 5/8 | 1 1/16 | 1/2 | 0.19 |
| **98 47 7/8"** | | 2 9/32 58 | | 7/8 | 1 23/64 | 1/2 | 0.26 |
| **98 47 9/16"** | | 2 11/64 55 | | 9/16 | 31/32 | 1/2 | 0.16 |

## Hexagon Sockets for hexagon socket screws

for internal square 3/8" or 1/2"

DIN 7422 IEC 60900 DIN EN 60900

98

> for metric internal hexagonal socket screws
> chrome plated
> special tool steel




**98 39 06**

1000 V 3/8"

S

| Product Number | Packaging | Inch mm | | Width across flats S mm | Length of non-insulated blade ± 2 Inch mm | Square drive Inch | lbs |
|---|---|---|---|---|---|---|---|
| **98 39 05** | | 3 75 | 1000 V 3/8" | 5.0 | 23/64 9 | 3/8 | 0.12 |
| **98 39 06** | | 3 75 | | 6.0 | 25/64 10 | 3/8 | 0.15 |
| **98 39 08** | | 3 75 | | 8.0 | 7/16 11 | 3/8 | 0.20 |
| **98 49 05** | | 3 75 | 1000 V 1/2" | 5.0 | 23/64 9 | 1/2 | 0.16 |
| **98 49 06** | | 3 75 | | 6.0 | 25/64 10 | 1/2 | 0.18 |
| **98 49 08** | | 3 75 | | 8.0 | 7/16 11 | 1/2 | 0.21 |

## Reversible Ratchet

with driving square 1/2"

ISO 3315 IEC 60900 DIN EN 60900

98
4

> reversible for clockwise and counterclockwise directions
> very reliable coupling of sockets with bolt-activated locking system
> chrome vanadium steel



**98 42**

1000 V 1/2"

| Product Number | Packaging | Inch mm | | Square drive Inch | lbs |
|---|---|---|---|---|---|
| **98 42** | | 10 1/2 265 | 1000 V 1/2" | 1/2 | 1.27 |

## Torque Wrench

with driving square, reversible

IEC 60900 DIN EN 60900 DIN EN ISO 6789

98

> reversible for tightening of left handed threads
> lockable torque adjustment
> very reliable coupling of sockets with bolt-activated locking system
> transparent insulated scale range
> calibration certificate included
> chrome vanadium steel



**98 43 50**

1000 V 3/8"



Transparent insulated scale range

| Product Number | Packaging | Inch mm | | Range of application | Square drive Inch | lbs |
|---|---|---|---|---|---|---|
| **98 33 25** | | 11 27/64 290 | 1000 V 3/8" | 5 - 25 Nm | 3/8 | 2.17 |
| **98 33 50** | | 15 385 | 1000 V 3/8" | 5 - 50 Nm | 3/8 | 2.71 |
| **98 43 50** | | 15 385 | 1000 V 3/8" | 5 - 50 Nm | 1/2 | 2.71 |

## Cable Knives
IEC 60900 DIN EN 60900

98
5

> ergonomically improved handle shape with comfortable slip guard
> secure grip due to slip-proof soft components
> thumb recess and "finger hook" at the end of the handle ensure a good transmission of force when the blade is pulled
> solid, fixed straight blade
> transparent protective cap
> blade: special tool steel, oil-hardened

**98 54**
Back of the blade is plastic coated to avoid short circuit




**98 52**
1000 V




**98 54**
1000 V

| Product Number | Packaging | ↔ Inch mm | | Handle | Blade length Inch mm | lbs |
|---|---|---|---|---|---|---|
| **98 52** | | 7 1/2 190 | 1000 V | insulated multi-component handle, VDE-tested | 1 31/32 50 | 0.18 |
| **98 54** | X | 7 1/2 190 | 1000 V | insulated multi-component handle, VDE-tested | 1 31/32 50 | 0.18 |

## Dismantling Knives
IEC 60900 DIN EN 60900

98
5

> ergonomically improved handle shape with comfortable slip guard
> secure grip due to slip-proof soft components
> thumb recess and "finger hook" at the end of the handle ensure a good transmission of force when the blade is pulled
> transparent protective cap

**98 53 03**
Solid, fixed hook blade; suitable for round cables; blade: special tool steel, oil-hardened

**98 53 13**
Narrow, fixed hook blade, sickle shaped; suitable for sector cables; blade: special tool steel, oil-hardened

**98 55**
Solid, fixed hook blade, sickle shaped; with guide shoe at the blade point: no damage of the conductor insulation; blade: surgical steel, stainless, air-hardened




**98 53 03**
1000 V




**98 53 13**
1000 V




**98 55**
1000 V



Guide shoe 98 55

| Product Number | Packaging | ↔ Inch mm | | Handle | Blade length Inch mm | Radius Inch mm | lbs |
|---|---|---|---|---|---|---|---|
| **98 53 03** | | 6 3/4 170 | 1000 V | insulated multi-component handle, VDE-tested | 1 7/64 28 | 9/32 7 | 0.14 |
| **98 53 13** | | 7 1/2 190 | 1000 V | insulated multi-component handle, VDE-tested | 1 31/32 50 | 1 37/64 40 | 0.14 |
| **98 55** | X | 7 1/4 180 | 1000 V | insulated multi-component handle, VDE-tested | 1 1/2 38 | 59/64 23.5 | 0.15 |

## Cable Knife
with replaceable blade
IEC 60900 DIN EN 60900

**98** 5

> straight blade with special grinding; replaceable
> with hinged blade guard, integrated in the handle, captive
> back of the blade is plastic coated to avoid short circuit
> ergonomically shaped safety handle
> blade: surgical steel, stainless, air-hardened



**98 56**
1000 V

| Product Number | Packaging | ↔ Inch mm | | Blade length Inch mm | lbs |
|---|---|---|---|---|---|
| **98 56** | | 7 1/2 190 | 1000 V | 1 31/32 50 | 0.14 |

| | |
|---|---|
| **98 56 09** | Spare Blade for 98 56 |

## Flat Nose Pliers of plastic
insulating
IEC 60900 DIN EN 60900 ASTM F1505

**98** 6

> full insulation reduces risk of short circuit
> for meter assembly and meter blocking
> class C; range of use up to -40°C/-40°F
> plastic material, fiberglass-reinforced
> handles with soft plastic zone for a better grip



**98 62 01**
1000 V

| Product Number | Packaging | ↔ Inch mm | | lbs |
|---|---|---|---|---|
| **98 62 01** | | 7 1/4 180 | 1000 V | 0.26 |

**KNIPEX** presents high-quality and sturdy plastic pliers featuring protection against bridging for working on live parts up to AC 1000V and DC 1500V.

These solid plastic pliers do not act on magnetic fields and are fully spark free. They are also excellent for use in chemically aggressive environments.

## Snipe Nose Pliers of plastic
insulating
IEC 60900 DIN EN 60900 ASTM F1505

**98** 6

> full insulation reduces risk of short circuit
> class C; range of use up to -40°C/-40°F
> plastic material, fiberglass-reinforced
> handles with soft plastic zone for better grip



**98 62 02**
1000 V

| Product Number | Packaging | ↔ Inch mm | | lbs |
|---|---|---|---|---|
| **98 62 02** | | 8 3/4 220 | 1000 V | 0.32 |

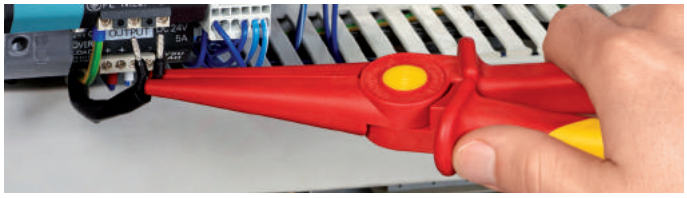

## Insulating Plastic Clamp
DIN VDE 0680-1

98 6

> for holding insulating mats in place
> with integrated spring
> full insulation reduces risk of short circuit
> solid plastic, fiberglass-reinforced



98 64 02
1000 V

| Product Number | Packaging | ↔ Inch mm | | Clamping capacity Inch mm | lbs |
|---|---|---|---|---|---|
| **98 64 02** | | 6<br>150 | 1000 V | 19/32<br>15 | 0.13 |

## Plastic Slip-On Caps
conical
DIN VDE 0680-1

98 6

> to cover bare live cable ends max. 25/64" (10 mm) dia.
> plastic




98 65 01
1000 V

| Product Number | Packaging | ↔ Inch mm | | Conductor key | lbs |
|---|---|---|---|---|---|
| **98 65 01** | | 3 5/32<br>80 | 1000 V | 1 | 0.02 |
| **98 65 02** | | 3 5/32<br>80 | | 2 | 0.02 |
| **98 65 03** | | 3 5/32<br>80 | | 3 | 0.02 |

## Self-Clamping Slip-On Caps
DIN VDE 0680-1

98 6

> to cover bare live cable ends
> plastic




98 65 30
1000 V

| Product Number | Packaging | ↔ Inch mm | | Inside dia. Inch mm | lbs |
|---|---|---|---|---|---|
| **98 65 10** | | 3 5/32<br>80 | 1000 V | 25/64<br>10 | 0.02 |
| **98 65 20** | | 3 15/16<br>100 | | 25/32<br>20 | 0.07 |
| **98 65 30** | | 4 1/4<br>110 | | 1 3/16<br>30 | 0.12 |

## Insulating Mats
from rubber
DIN EN / IEC 61112

98 6

> for added protection when working live or close to live parts




**98 67 05**
1000 V

| Product Number | Packaging | | Dimensions Inch mm | Thickness Inch mm | lbs |
|---|---|---|---|---|---|
| **98 67 05** | | 1000 V | 20 x 20<br>500 x 500 | 3/64<br>1.0 | 0.66 |
| **98 67 10** | | | 39 3/8 x 39 3/8<br>1000 x 1000 | 3/64<br>1.0 | 2.65 |

## PUK® Junior Hacksaw
IEC 60900 DIN EN 60900

98 90

> saw blade for metal and wood with 25 teeth per inch, exchangeable




**98 90**
1000 V

| Product Number | Packaging | ↔ Inch mm | | Saw blade length Inch mm | lbs |
|---|---|---|---|---|---|
| **98 90** | | 9 1/2<br>240 | 1000 V | 6<br>150 | 0.41 |



PUK® is a registered trade mark of Josef Haunstetter Sägenfabrik KG

# Compact Tool Case

17 parts

with insulated tools for working on electrical installations

IEC 60900 DIN EN 60900

98
6

- shock-resistant plastic case
- containing a range of insulated KNIPEX tools for work on electrical installations
- foam inserts with recesses for the tools
- fixable partition wall
- ext. dimensions (W x H x D): 14 11/64" x 4 21/64 x 12 13/64" (360 x 110 x 310 mm)



**98 99 11**
**1000 V**

| Product Number | Packaging | | | Set contents | Units | lbs |
|---|---|---|---|---|---|---|
| **98 99 11** | X | | Compact Tool Case 17 parts | | - | 8.73 |
| | | 1000 V | 03 07 200 | Combination Pliers | 1 | - |
| | | 1000 V | 70 07 160 | Diagonal Cutter | 1 | - |
| | | | 98 20 35 | | 1 | - |
| | | 1000 V | 98 20 40 | Screwdrivers for slotted screws | 1 | - |
| | | | 98 20 55 | | 1 | - |
| | | 1000 V | 98 24 00 | Screwdriver for cross recessed screws, Phillips® | 1 | - |
| | | 1000 V | 98 42 | Reversible Ratchet, with driving square 1/2" | 1 | - |
| | | 1000 V | 98 45 125 | Extension Bar, with internal/external square 1/2" | 1 | - |
| | | | 98 45 250 | | 1 | - |
| | | | 98 47 10 | | 1 | - |
| | | | 98 47 11 | | 1 | - |
| | | | 98 47 12 | | 1 | - |
| | | 1000 V | 98 47 13 | Hexagon Socket for hexagonal screws, with internal square 1/2" | 1 | - |
| | | | 98 47 14 | | 1 | - |
| | | | 98 47 17 | | 1 | - |
| | | | 98 47 19 | | 1 | - |
| | | 1000 V | 98 52 | Cable Knife | 1 | - |

# Safety Compact Tool Case

10 parts

IEC 60900 DIN EN 60900



> shock-resistant plastic case
> foam insert with precise recesses for holding the pliers
> equipped with a range of custom insulated KNIPEX tools for work on electrical systems
> all tools 100% tested and meet ASTM F1505 and IEC 60900 requirements
> ext. dimensions (W x H x D): 14 31/32 x 3 11/32 x 10 15/64" (380 x 85 x 260 mm)
> int. dimensions (W x H x D): 13 3/16 x 2 3/4 x 93/64" (335 x 70 x 230 mm)



**98 99 11 S3**
1000 V



**98 99 11 S4**
1000 V



**98 99 11 S5**
1000 V



**98 99 11 S6**
1000 V

| Product Number | Packaging | | | Set contents | Units | lbs |
|---|---|---|---|---|---|---|
| **98 99 11 S3** | X | - | Safety compact tool case with insulated tools (3/8") for working on electrical systems | - | - | 3.64 |
| | | 1000 V 3/8 | 98 31 | Reversible Ratchet, with external square 3/8" | 1 | - |
| | | 1000 V 3/8 | 98 35 125 | Extension Bar, with internal/external square 3/8" | 1 | - |
| | | | 98 35 250 | | 1 | - |
| | | 1000 V | 98 37 1/2" | 12-Point Socket, with internal square 3/8" | 1 | - |
| | | | 98 37 3/4" | | 1 | - |
| | | | 98 37 3/8" | | 1 | - |
| | | | 98 37 5/16" | | 1 | - |
| | | | 98 37 5/8" | | 1 | - |
| | | | 98 37 7/16" | | 1 | - |
| | | | 98 37 9/16" | | 1 | - |
| **98 99 11 S4** | X | - | Safety compact tool case with insulated tools (3/8") for working on electrical systems | - | - | 3.64 |
| | | 1000 V 3/8 | 98 31 | Reversible Ratchet, with external square 3/8" | 1 | - |
| | | 1000 V 3/8 | 98 35 125 | Extension Bar, with internal/external square 3/8" | 1 | - |
| | | | 98 35 250 | | 1 | - |
| | | 1000 V | 98 37 10 | Hexagon socket for hexagonal screws, with internal square 3/8" | 1 | - |
| | | | 98 37 11 | | 1 | - |
| | | | 98 37 12 | | 1 | - |
| | | | 98 37 13 | | 1 | - |
| | | | 98 37 14 | | 1 | - |
| | | | 98 37 17 | | 1 | - |
| | | | 98 37 19 | | 1 | - |
| **98 99 11 S5** | X | - | Safety compact tool case with insulated tools (1/2") for working on electrical systems | - | - | 5.62 |
| | | 1000 V 1/2 | 98 41 | Reversible Ratchet, with driving square 1/2" | 1 | - |
| | | 1000 V 1/2 | 98 45 125 | Extension Bar, with internal/external square 1/2" | 1 | - |
| | | | 98 45 250 | | 1 | - |
| | | 1000 V | 98 47 1" | 12-Point Socket, with internal square 1/2" | 1 | - |
| | | | 98 47 1/2" | | 1 | - |
| | | | 98 47 11/16" | | 1 | - |
| | | | 98 47 3/4" | | 1 | - |
| | | | 98 47 5/8" | | 1 | - |
| | | | 98 47 7/8" | | 1 | - |
| | | | 98 47 9/16" | | 1 | - |
| **98 99 11 S6** | X | - | Safety compact tool case with insulated tools (1/2") for working on electrical systems | - | - | 5.62 |
| | | 1000 V 1/2 | 98 41 | Reversible Ratchet, with driving square 1/2" | 1 | - |
| | | 1000 V 1/2 | 98 45 125 | Extension Bar, with internal/external square 1/2" | 1 | - |
| | | | 98 45 250 | | 1 | - |
| | | 1000 V | 98 47 13 | Hexagon socket for hexagonal screws, with internal square 1/2" | 1 | - |
| | | | 98 47 14 | | 1 | - |
| | | | 98 47 17 | | 1 | - |
| | | | 98 47 19 | | 1 | - |
| | | | 98 47 22 | | 1 | - |
| | | | 98 47 24 | | 1 | - |
| | | | 98 47 27 | | 1 | - |

# Standard Tool Case

26 parts

with insulated tools for working on electrical installations

IEC 60900 DIN EN 60900

98
9

> containing a range of insulated KNIPEX tools for work on electrical installations
> shock-resistant plastic case
> foam inserts with recesses for the tools
> fixable partition wall
> ext. dimensions (W x H x D): 17 21/64 x 4 1/8 x 15 5/32" (440 x 105 x 385 mm)



98 99 12
1000 V

| Product Number | Packaging | | | Set contents | Units | lbs |
|---|---|---|---|---|---|---|
| **98 99 12** | X | - | Standard Tool Case 26 parts | | - | 12.20 |
| | | 1000 V | 03 07 200 | Combination Pliers | 1 | - |
| | | 1000 V | 70 07 160 | Diagonal Cutter | 1 | - |
| | | | 98 00 10 | | 1 | - |
| | | | 98 00 11 | | 1 | - |
| | | | 98 00 12 | | 1 | - |
| | | 1000 V | 98 00 13 | Open End Wrench | 1 | - |
| | | | 98 00 14 | | 1 | - |
| | | | 98 00 17 | | 1 | - |
| | | | 98 00 19 | | 1 | - |
| | | 1000 V | 98 53 03 | Dismantling Knife for round cables | 1 | - |
| | | | 98 20 25 | | 1 | - |
| | | | 98 20 35 | | 1 | - |
| | | 1000 V | 98 20 40 | Screwdrivers for slotted screws | 1 | - |
| | | | 98 20 55 | | 1 | - |
| | | | 98 24 00 | | 1 | - |
| | | 1000 V | 98 24 01 | Screwdriver for cross recessed screws, Phillips® | 1 | - |
| | | | 98 24 02 | | 1 | - |
| | | 1000 V | 98 40 | T-Handle Drive, with driving square 1/2" | 1 | - |
| | | | 98 47 10 | | 1 | - |
| | | | 98 47 11 | | 1 | - |
| | | | 98 47 12 | | 1 | - |
| | | 1000 V | 98 47 13 | Hexagon Socket for hexagonal screws, with internal square 1/2" | 1 | - |
| | | | 98 47 14 | | 1 | - |
| | | | 98 47 17 | | 1 | - |
| | | | 98 47 19 | | 1 | - |
| | | 1000 V | 98 52 | Cable Knife | 1 | - |

## Tool Roll
15 parts
IEC 60900 DIN EN 60900

98
9



> tool roll made of hard-wearing polyester fabric
> with sturdy, adjustable snap-closure
> containing a range of insulated KNIPEX tools for work on electrical installations

| Product Number | Packaging | | | Set contents | Units | lbs |
|---|---|---|---|---|---|---|
| **98 99 13** | X | - | Tool Roll 15 parts | | - | 5.41 |
| | | 1000 V | 03 07 200 | Combination Pliers | 1 | - |
| | | 1000 V | 11 07 160 | Diagonal Cutter | 1 | - |
| | | 1000 V | 26 17 200 | Snipe Nose Side Cutting Pliers, (Stork Beak Pliers) | 1 | - |
| | | 1000 V | 70 07 160 | Diagonal Cutter | 1 | - |
| | | 1000 V | 95 17 200 | Cable Shears, with twin cutting edge | 1 | - |
| | | 1000 V | 98 00 10 | Open End Wrench | 1 | - |
| | | | 98 00 13 | | 1 | - |
| | | | 98 00 14 | | 1 | - |
| | | | 98 00 17 | | 1 | - |
| | | | 98 00 19 | | 1 | - |
| | | 1000 V | 98 20 25 | Screwdrivers for slotted screws | 1 | - |
| | | | 98 20 40 | | 1 | - |
| | | | 98 20 55 | | 1 | - |
| | | | 98 20 65 | | 1 | - |
| | | 1000 V | 98 52 | Cable Knife | 1 | - |

## Safety Tool Rolls
8 parts

98
99



> plastic tool roll
> equipped with open end wrenches for work on electrical systems
> all tools 100% tested and meet ASTM F1505 and IEC 60900 requirements
> dimensions, rolled out (W x H x D): 16 9/64 x 63/64 x 11 13/32" (410 x 25 x 290 mm)
> dimensions, rolled up (W x H x D): 2 61/64 x 2 61/64 x 11 13/32" (75 x 75 x 290 mm)

| Product Number | Packaging | | | Set contents | Units | lbs |
|---|---|---|---|---|---|---|
| **98 99 13 S4** | | - | Safety Toll Roll 8 parts | - | - | 1.71 |
| | | 1000 V | 98 00 1/4" | Open End Wrench | 1 | - |
| | | | 98 00 5/16" | | 1 | - |
| | | | 98 00 3/8" | | 1 | - |
| | | | 98 00 7/16" | | 1 | - |
| | | | 98 00 1/2" | | 1 | - |
| | | | 98 00 9/16" | | 1 | - |
| | | | 98 00 5/8" | | 1 | - |
| | | | 98 00 3/4" | | 1 | - |
| **98 99 13 S5** | | | Safety Toll Roll 8 parts | | - | 2.54 |
| | | 1000 V | 98 00 24 | Open End Wrench | 1 | - |
| | | | 98 00 22 | | 1 | - |
| | | | 98 00 19 | | 1 | - |
| | | | 98 00 17 | | 1 | - |
| | | | 98 00 14 | | 1 | - |
| | | | 98 00 13 | | 1 | - |
| | | | 98 00 10 | | 1 | - |
| | | | 98 00 08 | | 1 | - |

# Universal Tool Case

46 parts

IEC 60900 DIN EN 60900



**98 99 14**

> hard-wearing case made of ABS material, red; containing a range of KNIPEX tools for work on electrical installations, tested according to IEC 60900, as well as additional protective covers, clamps and gloves
> sturdy aluminum frame with D-shape rings for belt and fix, sturdy center board with multipurpose push-in facilities by elastic loops and 12 small pockets
> comfortable handle and mounting device for a "trolley" embedded in the bottom (available for ordering ref. 00 21 40 T)
> metal hinges
> 66 pounds (30 kg) maximum load
> can be opened on one or both sides; bottom tray and cover can be opened independently
> stands securely in any opening position due to lid-holders and hinge mechanisms on both sides, that register in a position of 45° and 90°
> 3-digit lock and 2 clamp-locks for fixation of the cover
> removable document compartment and removable tool board, with 13 push-in compartments on one side
> 2 tilting locks to fix the bottom
> base tray height 2 9/32" (58 mm), can be subdivided by flexible inserts; cover plate with 6 large push-in compartments, can be fixed by push-button
> ext. dimensions ( W x H x D):
19 19/64 x 10 3/64 x 16 9/64" (490 x 220 x 410 mm)
int. dimensions (W x H x D):
17 33/64 x (4 1/8 + 4 1/8) 13 25/32" (445 x (105 + 105) x 350 mm)

**00 21 40 T**

> telescopic handle for rolling transport
> applicable for cases: 00 21 40 LE Tool Case "BIG Twin" and 98 99 14 Universal Tool Case
> height adjustable handle with catch
> integrated mechanism for fixation to the case, for rapid assembly and removal
> with 2 smooth running rolls
> dimensions: 60 x 245 x 400 (1,000) mm (extended)



98 99 14
1000 V



**00 21 40 T**





| Product Number | Packaging | | | Set contents | Units | lbs |
|---|---|---|---|---|---|---|
| **98 99 14** | X | - | Universal Tool Case 46 parts | - | - | 35.83 |
| | | | 70 07 160 | Diagonal Cutter | 1 | - |
| | | 1000 V | 88 07 250 | Alligator® Water Pump Pliers | 1 | - |
| | | | 98 00 10 | Open End Wrenches | 1 | - |
| | | | 98 00 13 | | 1 | - |
| | | | 98 00 14 | | 1 | - |
| | | | 98 00 17 | | 1 | - |
| | | | 98 00 19 | | 1 | - |
| | | 1000 V | 98 00 22 | | 1 | - |
| | | | 98 01 10 | Box Wrenches | 1 | - |
| | | | 98 01 13 | | 1 | - |
| | | | 98 01 14 | | 1 | - |
| | | | 98 01 17 | | 1 | - |
| | | | 98 01 19 | | 1 | - |
| | | | 98 01 22 | | 1 | - |
| | | 1000 V | 98 67 05 | Insulating Mat, from rubber | 3 | - |
| | | 1000 V 1/2" | 98 40 | T-Handle Drive, with driving square 1/2" | 1 | - |
| | | | 98 42 | Reversible Ratchet, with driving square 1/2" | 1 | - |
| | | 1000 V 1/2" | 98 45 125 | Extension Bar, with internal/external square 1/2" | 1 | - |
| | | | 98 45 250 | | 1 | - |
| | | | 98 47 10 | Hexagon socket for hexagonal screws, with internal square 1/2" | 1 | - |
| | | | 98 47 11 | | 1 | - |
| | | | 98 47 12 | | 1 | - |
| | | | 98 47 13 | | 1 | - |
| | | 1000 V | 98 47 14 | | 1 | - |
| | | | 98 47 17 | | 1 | - |
| | | | 98 47 19 | | 1 | - |
| | | | 98 47 22 | | 1 | - |
| | | | 98 47 24 | | 1 | - |
| | | 1000 V | 98 52 | Cable Knife | 1 | - |
| | | | 98 53 03 | Dismantling Knife for round cables | 1 | - |
| | | 1000 V | 98 64 02 | Insulating Plastic Clamp, from plastic | 6 | - |
| | | 1000 V | 98 65 40 | Electricians' Gloves | 1 | - |
| **98 99 14 LE** | | | Universal Tool Case empty | - | - | 290.5<br>8235 |
| **00 21 40 T** | | | Trolley for rolling case transport | - | - | 42.3<br>1200 |



9K 98 98 20 US



9K 98 98 21 US



9K 98 98 22 US



9K 98 98 25 US



9K 98 98 26 US

| Product Number | Packaging | | | Set contents | Units | ⚖ lbs |
|---|---|---|---|---|---|---|
| **9K 98 98 20 US** | | 1000 V | 5 Pc Automotive Pliers /Screwdriver Tool Set-1,000V | - | - | 2.90 |
| | | | 74 08 250 US | 10" High Leverage Diagonal Cutters-1,000V Insulated | 1 | - |
| | | | 88 08 250 US | 10" Alligator® Pliers-1,000V Insulated | 1 | - |
| | | | 9T 53704 | MAXXPRO 1,000V Insulated 4" Slotted 5/32" Tip | 1 | - |
| | | | 9T 53706 | MAXXPRO 1,000V Insulated 6" Slotted 1/4" Tip | 1 | - |
| | | | 9T 53712 | MAXXPRO 1,000V Insulated 4" Phillips #2 | 1 | - |
| **9K 98 98 21 US** | | 1000 V | 5 Pc Pliers/Screwdriver Tool Set-1,000V Insulated | | - | 2.62 |
| | | | 74 08 200 US | 8" High Leverage Diagonal Cutters-1,000V Insulated | 1 | - |
| | | | 02 08 225 US | 9" High Leverage Combination Pliers-1,000V Insulated | 1 | - |
| | | | 9T 53705 | MAXXPRO 1,000V Insulated 5" Slotted 7/32" Tip | 1 | - |
| | | | 9T 53712 | MAXXPRO 1,000V Insulated 4" Phillips #2 | 1 | - |
| | | | 9T 54812 | MAXXPRO 1,000V Insulated 5" Square #2 | 1 | - |
| **9K 98 98 22 US** | | 1000 V | 5 Pc Pliers/Screwdriver Tool Set-1,000V Insulated | - | - | 4.35 |
| | | | 74 08 250 US | 10" High Leverage Diagonal Cutters-1,000V Insulated | 1 | - |
| | | | 09 08 240 US | 9-1/4" High Leverage Lineman New England Head-1,000V Insulated | 1 | - |
| | | | 9T 53705 | MAXXPRO 1,000V Insulated 5" Slotted 7/32" Tip | 1 | - |
| | | | 9T 53712 | MAXXPRO 1,000V Insulated 4" Phillips #2 | 1 | - |
| | | | 9T 54812 | MAXXPRO 1,000V Insulated 5" Square #2 | 1 | - |
| **9K 98 98 25 US** | | 1000 V | 7 Pc Pliers/Screwdriver Tool Set-1,000V, Nylon Pouch | - | - | 4.35 |
| | | | 74 08 200 US | 8" High Leverage Diagonal Cutters-1,000V Insulated | 1 | - |
| | | | 88 08 250 US | 10" Alligator® Pliers-1,000V Insulated | 1 | - |
| | | | 26 18 200 US | 8" Long Nose Pliers w/ Cutter-1,000V Insulated | 1 | - |
| | | | 02 08 225 US | 9" High Leverage Combination Pliers-1,000V Insulated | 1 | - |
| | | | 9T 53705 | MAXXPRO 1,000V Insulated 5" Slotted 7/32" Tip | 1 | - |
| | | | 9T 53712 | MAXXPRO 1,000V Insulated 4" Phillips #2 | 1 | - |
| | | | 9T 54812 | MAXXPRO 1,000V Insulated 5" Square #2 | 1 | - |
| **9K 98 98 26 US** | | 1000 V | 7 Pc Pliers/Screwdriver Tool Set-1,000V, Nylon Pouch | - | - | 4.45 |
| | | | 09 08 240 US | 9-1/4" High Leverage Lineman New England Head-1,000V Insulated | 1 | - |
| | | | 26 18 200 US | 8" Long Nose Pliers w/ Cutter-1,000V Insulated | 1 | - |
| | | | 88 08 250 US | 10" Alligator® Pliers-1,000V Insulated | 1 | - |
| | | | 74 08 250 US | 10" High Leverage Diagonal Cutters-1,000V Insulated | 1 | - |
| | | | 9T 53705 | MAXXPRO 1,000V Insulated 5" Slotted 7/32" Tip | 1 | - |
| | | | 9T 53712 | MAXXPRO 1,000V Insulated 4" Phillips #2 | 1 | - |
| | | | 9T 54812 | MAXXPRO 1,000V Insulated 5" Square #2 | 1 | - |



**9K 98 98 27 US**



**9K 98 98 30 US**



**9K 98 98 31 US**

| Product Number | Packaging | | | Set contents | Units | lbs |
|---|---|---|---|---|---|---|
| **9K 98 98 27 US** | | | 7 Pc Pliers/Screwdriver Tool Set-1,000V, Nylon Pouch | - | - | 4.33 |
| | | | 26 18 200 US | 10" High Leverage Diagonal Cutters-1,000V Insulated | 1 | - |
| | | | 74 08 200 US | 10" Alligator® Pliers-1,000V Insulated | 1 | - |
| | | | 02 08 225 US | MAXXPRO 1,000V Insulated 4" Slotted 5/32" Tip | 1 | - |
| | | 1000 V | 88 08 250 US | MAXXPRO 1,000V Insulated 6" Slotted 1/4" Tip | 1 | - |
| | | | 9T 53704 | MAXXPRO 1,000V Insulated 4" Phillips #2 | 1 | - |
| | | | 9T 53706 | MAXXPRO 1,000V Insulated 6" Slotted 1/4" Tip | 1 | - |
| | | | 9T 53712 | MAXXPRO 1,000V Insulated 4" Phillips #2 | 1 | - |
| **9K 98 98 30 US** | | | 10 Pc Pliers/Screwdriver Tool Set-1,000V, Hard Case | - | - | 6.54 |
| | | | 02 08 225 US | 9" High Leverage Combination Pliers-1,000V Insulated | 1 | - |
| | | | 74 08 200 US | 8" High Leverage Diagonal Cutters-1,000V Insulated | 1 | - |
| | | | 95 18 165 US | 6-1/2" Cable Shears-1,000V Insulated | 1 | - |
| | | | 26 18 200 US | 8" Long Nose Pliers w/ Cutter-1,000V Insulated | 1 | - |
| | | 1000 V | 88 08 250 US | 10" Alligator® Pliers-1,000V Insulated | 1 | - |
| | | | 9T 53704 | MAXXPRO 1,000V Insulated 4" Slotted 5/32" Tip | 1 | - |
| | | | 9T 53706 | MAXXPRO 1,000V Insulated 6" Slotted 1/4" Tip | 1 | - |
| | | | 9T 53711 | MAXXPRO 1,000V Insulated 3-1/4 Phillips #1 | 1 | - |
| | | | 9T 53712 | MAXXPRO 1,000V Insulated 4" Phillips #2 | 1 | - |
| | | | 9T 54812 | MAXXPRO 1,000V Insulated 5" Square #2 | 1 | - |
| **9K 98 98 31 US** | | | 10 Pc Pliers/Screwdriver Tool Set-1,000V, Hard Case | - | - | 6.90 |
| | | | 02 08 225 US | 10" High Leverage Diagonal Cutters-1,000V Insulated | 1 | - |
| | | | 74 08 200 US | 6-1/4" Cable Shears-1,000V Insulated | 1 | - |
| | | | 95 18 165 US | 9-1/4" High Leverage Lineman New England Head-1,000V Insulated | 1 | - |
| | | | 26 18 200 US | 8" Long Nose Pliers w/ Cutter-1,000V Insulated | 1 | - |
| | | 1000 V | 88 08 250 US | 10" Alligator® Pliers-1,000V Insulated | 1 | - |
| | | | 9T 53704 | MAXXPRO 1,000V Insulated 4" Slotted 5/32" Tip | 1 | - |
| | | | 9T 53706 | MAXXPRO 1,000V Insulated 6" Slotted 1/4" Tip | 1 | - |
| | | | 9T 53711 | MAXXPRO 1,000V Insulated 3-1/4 Phillips #1 | 1 | - |
| | | | 9T 53712 | MAXXPRO 1,000V Insulated 4" Phillips #2 | 1 | - |
| | | | 9T 54812 | MAXXPRO 1,000V Insulated 5" Square #2 | 1 | - |

| | |
|---|---|
| **00 11 01** | 192 |
| **00 11 02** | 193 |
| **00 11 03** | 193 |
| **00 11 04** | 193 |
| **00 11 06** | 194 |
| **00 11 06 V01** | 194 |
| **00 11 V50** | 195 |
| **00 19 41** | 196 |
| **00 19 55 S4** | 196 |
| **00 19 55 S5** | 196 |
| **00 19 56** | 197 |
| **00 19 56 LE** | 197 |
| **00 19 57** | 197 |
| **00 19 58 V01** | 197 |
| **00 19 58 V02** | 197 |
| **00 19 72 LE** | 198, 204 |
| **00 20 01 V15** | 199 |
| **00 20 01 V16** | 199 |
| **00 20 01 V17** | 199 |
| **00 20 03 SB** | 200 |
| **00 20 03 V02** | 200 |
| **00 20 04 SB** | 200 |
| **00 20 04 V01** | 200 |
| **00 20 05 US** | 201 |
| **00 20 06 US1** | 201 |
| **00 20 06 US2** | 201 |
| **00 20 07 US1** | 201 |
| **00 20 08 US1** | 201 |
| **00 20 08 US2** | 201 |
| **00 20 09 V01** | 202 |
| **00 20 10** | 202 |
| **00 20 11** | 202 |
| **00 20 16** | 203 |
| **00 20 16 P** | 203 |
| **00 20 16 P ESD** | 203 |
| **00 20 17** | 203 |
| **00 20 18** | 203 |
| **00 20 18 ESD** | 203 |
| **00 20 72 V01** | 204 |
| **00 20 72 V02** | 204 |
| **00 21 40 T** | 247 |
| **00 21 41 LE** | 205 |
| **00 31 20 V02** | 204 |
| **00 31 V01 US** | 204 |
| **00 50 01 T BK** | 211 |
| **00 50 02 T BK** | 211 |
| **00 50 03 T BK** | 211 |
| **00 50 04 T BK** | 211 |
| **02 01 180** | 27 |
| **02 01 200** | 27 |
| **02 01 225** | 27 |
| **02 02 180** | 27 |
| **02 02 200** | 27 |
| **02 02 225** | 27 |
| **02 02 225 T BKA** | 27, 210 |
| **02 08 200 US** | 27, 214 |
| **02 08 225 US** | 27, 214 |
| **03 01 140** | 28 |
| **03 01 160** | 28 |
| **03 01 180** | 28 |
| **03 01 200** | 28 |
| **03 01 250** | 28 |
| **03 02 160** | 28 |
| **03 02 180** | 28 |
| **03 02 200** | 28 |
| **03 08 160 SBA** | 28, 214 |
| **03 08 200 SBA** | 28, 214 |
| **08 21 145** | 29 |
| **08 22 145** | 29 |
| **08 22 145 T BKA** | 29, 210 |
| **08 28 145 US** | 29, 215 |
| **09 01 240** | 31 |
| **09 02 240** | 31 |
| **09 02 240 T BKA** | 31, 210 |
| **09 08 240 US** | 31, 215 |
| **09 11 240** | 31 |
| **09 12 240** | 31 |
| **09 12 240 T BKA** | 31, 210 |
| **10 98 I220** | 32 |
| **10 99 I220** | 32 |
| **11 01 160** | 33 |
| **11 02 160** | 33 |
| **11 08 160 SBA** | 33, 215 |
| **11 82 130** | 34 |
| **11 92 140** | 34 |
| **12 11 180** | 35 |
| **12 12 02** | 37 |
| **12 12 06** | 37 |
| **12 12 10** | 37 |
| **12 12 11** | 37 |
| **12 12 13** | 37 |
| **12 12 14** | 37 |
| **12 19 180** | 35 |
| **12 21 180** | 35 |
| **12 29 180** | 35 |
| **12 40 200** | 38 |
| **12 42 195** | 39 |
| **12 49 01** | 38 |
| **12 49 02** | 38 |
| **12 49 03** | 38 |
| **12 49 21** | 39 |
| **12 49 23** | 39 |
| **12 50 200** | 38 |
| **12 59 01** | 38 |
| **12 59 02** | 38 |
| **12 62 180** | 40 |
| **12 64 180** | 40 |
| **12 69 21** | 40 |
| **12 69 23** | 40 |
| **12 69 31** | 40 |
| **12 74 180 SB** | 41 |
| **12 79 31** | 41 |
| **12 80 040 SB** | 41 |
| **12 80 100 SB** | 41 |
| **13 01 160** | 42 |
| **13 01 614** | 42 |
| **13 02 160** | 42 |
| **13 02 614 T BKA** | 42, 210 |
| **13 42 165** | 43 |
| **13 62 180** | 44 |
| **13 81 8** | 45 |
| **13 82 8** | 45 |
| **13 82 8 T BKA** | 45, 210 |
| **13 88 8 US** | 45, 216 |
| **15 11 120** | 46 |
| **15 19 005** | 46 |
| **15 19 006** | 46 |
| **15 19 008** | 46 |
| **15 19 010** | 46 |
| **15 51 160** | 46 |
| **15 61 160** | 46 |
| **15 81 160** | 46 |
| **16 20 16 SB** | 47 |
| **16 20 165 SB** | 47 |
| **16 29 165** | 47 |
| **16 30 135 SB** | 47 |
| **16 39 135** | 47 |
| **16 40 150** | 48 |
| **16 49 150** | 48 |
| **16 60 05 SB** | 48 |
| **16 65 125 SB** | 49 |
| **16 80 125 SB** | 49 |
| **16 85 125 SB** | 49 |
| **16 95 01 SB** | 50 |
| **16 95 02 SB** | 50 |
| **19 01 130** | 51 |
| **20 01 125** | 51 |
| **20 01 140** | 51 |
| **20 01 160** | 51 |
| **20 01 180** | 51 |
| **20 02 140** | 51 |
| **20 02 160** | 51 |
| **20 06 160** | 51, 216 |
| **22 01 125** | 52 |
| **22 01 140** | 52 |
| **22 01 160** | 52 |
| **22 02 140** | 52 |
| **22 02 160** | 52 |
| **22 08 160 SBA** | 52, 216 |
| **23 01 140** | 52 |
| **25 01 125** | 53 |
| **25 01 140** | 53 |
| **25 01 160** | 53 |
| **25 02 140** | 53 |
| **25 02 160** | 53 |
| **25 08 160 SBA** | 53, 217 |
| **25 21 160** | 53 |
| **26 11 200** | 54 |
| **26 11 200 S1** | 54 |
| **26 12 200** | 54 |
| **26 12 200 T BKA** | 54, 210 |
| **26 16 200 T** | 211 |
| **26 18 200 US** | 55, 217 |
| **26 21 200** | 54 |
| **26 22 200** | 54 |
| **26 22 200 T BKA** | 54, 210 |
| **26 26 200 T** | 211 |
| **26 28 200 SBA** | 55, 217 |
| **27 01 160** | 56 |
| **28 01 200** | 56 |
| **28 21 200** | 56 |
| **28 71 280** | 57 |
| **28 81 280** | 57 |
| **29 11 160** | 58 |
| **29 21 160** | 58 |
| **30 11 140** | 59 |
| **30 11 160** | 59 |
| **30 11 190** | 59 |
| **30 16 160** | 59, 218 |
| **30 21 140** | 59 |
| **30 21 160** | 59 |
| **30 21 190** | 59 |
| **30 31 160** | 59 |
| **30 36 160** | 59, 218 |
| **30 41 160** | 60 |
| **31 11 160** | 60 |
| **31 21 160** | 60 |
| **32 11 135** | 61 |
| **32 21 135** | 61 |
| **32 31 135** | 61 |
| **33 01 160** | 61 |
| **34 12 130** | 64 |
| **34 12 130 ESD** | 64 |
| **34 22 130** | 64 |
| **34 22 130 ESD** | 64 |
| **34 32 130** | 64 |
| **34 32 130 ESD** | 64 |
| **34 42 130** | 64 |
| **34 42 130 ESD** | 64 |
| **34 52 130** | 64 |
| **34 52 130 ESD** | 64 |
| **35 11 115** | 65 |
| **35 12 115** | 65 |
| **35 12 115 ESD** | 66 |
| **35 21 115** | 65 |
| **35 22 115** | 65 |
| **35 22 115 ESD** | 66 |
| **35 31 115** | 65 |
| **35 32 115** | 65 |
| **35 32 115 ESD** | 66 |
| **35 41 115** | 65 |
| **35 42 115** | 65 |
| **35 42 115 ESD** | 66 |
| **35 52 145** | 65 |
| **35 62 145** | 65 |
| **35 72 145** | 65 |
| **35 82 145** | 65 |
| **36 12 130** | 67 |
| **36 22 125** | 67 |
| **36 32 125** | 67 |
| **37 11 125** | 68 |
| **37 21 125** | 68 |
| **37 31 125** | 68 |
| **37 41 125** | 68 |
| **38 11 200** | 69 |
| **38 21 200** | 69 |
| **38 31 200** | 69 |
| **38 41 190** | 69 |
| **38 71 200** | 69 |
| **38 81 200 A** | 69 |
| **38 81 200 B** | 69 |
| **38 91 200** | 69 |
| **40 04 180** | 70 |
| **40 04 250** | 70 |
| **40 14 250** | 70 |
| **41 04 180** | 71 |
| **41 04 250** | 71 |
| **41 04 300** | 71 |
| **41 14 250** | 71 |
| **41 24 225** | 71 |
| **41 34 165** | 71 |
| **41 44 200** | 71 |
| **42 14 280** | 72 |
| **42 24 280** | 72 |
| **42 34 280** | 72 |
| **42 44 280** | 72 |
| **44 10 J5** | 73 |
| **44 10 J6** | 73 |
| **44 11 J0** | 74 |
| **44 11 J1** | 74 |
| **44 11 J2** | 74 |
| **44 11 J3** | 74 |
| **44 11 J4** | 74 |
| **44 19 J5** | 73 |
| **44 19 J6** | 73 |
| **44 20 J51** | 73 |
| **44 20 J61** | 73 |
| **44 21 J01** | 74 |
| **44 21 J11** | 74 |
| **44 21 J21** | 74 |
| **44 21 J31** | 74 |
| **44 21 J41** | 74 |
| **44 29 J51** | 73 |
| **44 29 J61** | 73 |
| **44 31 J02** | 74 |
| **44 31 J12** | 74 |
| **44 31 J22** | 74 |
| **44 31 J32** | 74 |
| **44 31 J42** | 74 |
| **45 10 170** | 80 |
| **45 21 200** | 80 |
| **46 10 100** | 81 |
| **46 10 A5** | 73 |
| **46 10 A6** | 73 |
| **46 11 A0** | 75 |
| **46 11 A1** | 75 |
| **46 11 A2** | 75 |
| **46 11 A3** | 75 |
| **46 11 A4** | 75 |
| **46 11 G0** | 80 |
| **46 11 G1** | 80 |
| **46 11 G2** | 80 |
| **46 11 G3** | 80 |
| **46 11 G4** | 80 |
| **46 19 A5** | 73 |
| **46 19 A6** | 73 |
| **46 20 A51** | 73 |
| **46 20 A61** | 73 |
| **46 21 A01** | 75 |
| **46 21 A11** | 75 |

| | |
|---|---|
| **46 21 A21** | 75 |
| **46 21 A31** | 75 |
| **46 21 A41** | 75 |
| **46 29 A51** | 73 |
| **46 29 A61** | 73 |
| **46 31 A02** | 75 |
| **46 31 A12** | 75 |
| **46 31 A22** | 75 |
| **46 31 A32** | 75 |
| **46 31 A42** | 75 |
| **48 11 J0** | 76 |
| **48 11 J1** | 76 |
| **48 11 J2** | 76 |
| **48 11 J3** | 76 |
| **48 11 J4** | 76 |
| **48 21 J01** | 76 |
| **48 21 J11** | 76 |
| **48 21 J21** | 76 |
| **48 21 J31** | 76 |
| **48 21 J41** | 76 |
| **48 31 J0** | 77 |
| **48 31 J1** | 77 |
| **48 31 J2** | 77 |
| **48 31 J3** | 77 |
| **48 41 J01** | 77 |
| **48 41 J11** | 77 |
| **48 41 J21** | 77 |
| **48 41 J31** | 77 |
| **49 11 A0** | 78 |
| **49 11 A1** | 78 |
| **49 11 A2** | 78 |
| **49 11 A3** | 78 |
| **49 11 A4** | 78 |
| **49 21 A01** | 78 |
| **49 21 A11** | 78 |
| **49 21 A21** | 78 |
| **49 21 A31** | 78 |
| **49 21 A41** | 78 |
| **49 31 A0** | 79 |
| **49 31 A1** | 79 |
| **49 31 A2** | 79 |
| **49 31 A3** | 79 |
| **49 41 A01** | 79 |
| **49 41 A11** | 79 |
| **49 41 A21** | 79 |
| **49 41 A31** | 79 |
| **50 00 160** | 82 |
| **50 00 180** | 82 |
| **50 00 210** | 82 |
| **50 00 250** | 82 |
| **50 00 300** | 82 |
| **50 01 160** | 82 |
| **50 01 180** | 82 |
| **50 01 210** | 82 |
| **50 01 225** | 82 |
| **50 01 250** | 82 |
| **50 01 300** | 82 |
| **51 01 210** | 83 |
| **55 00 300** | 83 |
| **61 01 200** | 86 |
| **61 02 200** | 86 |
| **62 12 120** | 103 |
| **64 01 115** | 105 |
| **64 02 115** | 105 |
| **64 02 115 ESD** | 106 |
| **64 11 115** | 105 |
| **64 12 115** | 105 |
| **64 12 115 ESD** | 106 |
| **64 22 115** | 105 |
| **64 32 120** | 105 |
| **64 32 120 ESD** | 106 |
| **64 42 115** | 105 |
| **64 52 115** | 105 |
| **64 62 120** | 105 |
| **64 62 120 ESD** | 106 |
| **64 72 120** | 105 |
| **67 01 140** | 86 |
| **67 01 160** | 86 |
| **67 01 200** | 86 |
| **68 01 160** | 87 |
| **68 01 180** | 87 |
| **68 01 200** | 87 |
| **68 01 280** | 87 |
| **69 01 130** | 87 |
| **69 03 130** | 87 |
| **70 01 110** | 93 |
| **70 01 125** | 93 |
| **70 01 140** | 93 |
| **70 01 160** | 94 |
| **70 01 180** | 93 |
| **70 02 125** | 93 |
| **70 02 140** | 93 |
| **70 02 160** | 94 |
| **70 02 180** | 93 |
| **70 06 160 T** | 211 |
| **70 06 180 T** | 211 |
| **70 08 160 SBA** | 94, 218 |
| **70 08 180 SBA** | 93, 218 |
| **70 11 110** | 93 |
| **70 26 160** | 94, 218 |
| **71 01 160** | 88 |
| **71 01 200** | 88 |
| **71 01 200 R** | 90 |
| **71 01 250** | 90 |
| **71 02 200** | 88 |
| **71 02 200 T BKA** | 88, 210 |
| **71 12 200** | 88 |
| **71 21 200** | 89 |
| **71 22 200** | 89 |
| **71 22 200 T BKA** | 89, 210 |
| **71 31 200** | 89 |
| **71 31 200 R** | 90 |
| **71 31 250** | 90 |
| **71 32 200** | 89 |
| **71 32 200 T BKA** | 89, 210 |
| **71 41 200** | 89 |
| **71 72 460** | 91 |
| **71 72 610** | 91 |
| **71 72 760** | 91 |
| **71 72 910** | 91 |
| **71 79 460** | 91 |
| **71 79 610** | 91 |
| **71 79 760** | 91 |
| **71 79 910** | 91 |
| **71 82 950** | 92 |
| **71 89 950** | 92 |
| **72 01 140** | 95 |
| **72 01 160** | 95 |
| **72 01 180** | 95 |
| **72 02 125** | 95 |
| **72 11 160** | 95 |
| **72 21 160** | 95 |
| **72 51 160** | 95 |
| **72 62 200** | 96 |
| **73 02 160** | 98 |
| **73 06 160** | 98, 219 |
| **73 71 180** | 99 |
| **73 72 180 BK** | 99 |
| **74 01 140** | 101 |
| **74 01 160** | 101 |
| **74 01 180** | 101 |
| **74 01 200** | 101 |
| **74 01 250** | 101 |
| **74 02 140** | 101 |
| **74 02 160** | 101 |
| **74 02 180** | 101 |
| **74 02 200** | 101 |
| **74 02 200 T BKA** | 101, 210 |
| **74 02 250** | 101 |
| **74 02 250 T BKA** | 101, 210 |
| **74 06 200 T** | 211 |
| **74 06 250 T** | 211 |
| **74 08 200 US** | 101, 219 |
| **74 08 250 US** | 101, 219 |
| **74 12 160** | 101 |
| **74 12 180** | 101 |
| **74 21 180** | 101 |
| **74 21 200** | 101 |
| **74 21 250** | 101 |
| **74 22 200** | 101 |
| **74 22 200 T BKA** | 101, 210 |
| **74 22 250** | 101 |
| **74 22 250 T BKA** | 210 |
| **74 91 250** | 102 |
| **75 02 125** | 107 |
| **75 12 125** | 107 |
| **75 22 125** | 107 |
| **75 52 125** | 107 |
| **76 01 125** | 102 |
| **76 12 125** | 102 |
| **76 22 125** | 102 |
| **76 81 125** | 102 |
| **77 01 115** | 109 |
| **77 01 130** | 109 |
| **77 02 115** | 109 |
| **77 02 115 ESD** | 111 |
| **77 02 120 H** | 112 |
| **77 02 120 H ESD** | 113 |
| **77 02 130** | 109 |
| **77 02 135 H** | 112 |
| **77 02 135 H ESD** | 113 |
| **77 11 115** | 109 |
| **77 12 115** | 109 |
| **77 12 115 ESD** | 111 |
| **77 21 115 N** | 109 |
| **77 21 130** | 109 |
| **77 22 115** | 109 |
| **77 22 115 ESD** | 111 |
| **77 22 130** | 109 |
| **77 32 115** | 109 |
| **77 32 115 ESD** | 111 |
| **77 32 120 H** | 112 |
| **77 32 120 H ESD** | 113 |
| **77 41 115** | 109 |
| **77 42 115** | 109 |
| **77 42 115 ESD** | 111 |
| **77 42 130** | 109 |
| **77 52 115** | 109 |
| **77 52 115 ESD** | 111 |
| **77 72 115** | 109 |
| **77 72 115 ESD** | 111 |
| **78 03 125** | 115 |
| **78 03 125 ESD** | 116 |
| **78 03 140** | 117 |
| **78 03 140 ESD** | 117 |
| **78 13 125** | 115 |
| **78 13 125 ESD** | 116 |
| **78 23 125** | 115 |
| **78 31 125** | 115 |
| **78 41 125** | 115 |
| **78 61 125** | 115 |
| **78 61 125 ESD** | 116 |
| **78 61 140** | 117 |
| **78 61 140 ESD** | 117 |
| **78 71 125** | 115 |
| **78 71 125 ESD** | 116 |
| **78 81 125** | 115 |
| **78 91 125** | 115 |
| **79 02 120** | 119 |
| **79 02 120 ESD** | 121 |
| **79 02 125** | 119 |
| **79 02 125 ESD** | 121 |
| **79 12 125** | 119 |
| **79 12 125 ESD** | 121 |
| **79 22 120** | 119 |
| **79 22 120 ESD** | 121 |
| **79 22 125** | 119 |
| **79 22 125 ESD** | 121 |
| **79 32 125** | 119 |
| **79 32 125 ESD** | 121 |
| **79 42 125** | 119 |
| **79 42 125 ESD** | 121 |
| **79 42 125 Z** | 119 |
| **79 42 125 Z ESD** | 121 |
| **79 52 125** | 119 |
| **79 52 125 ESD** | 121 |
| **79 62 125** | 119 |
| **79 62 125 ESD** | 121 |
| **81 01 250** | 122 |
| **81 11 250** | 122 |
| **81 19 250** | 122 |
| **83 10 010** | 123 |
| **83 10 015** | 123 |
| **83 10 020** | 123 |
| **83 10 030** | 123 |
| **83 10 040** | 123 |
| **83 20 010** | 123 |
| **83 20 015** | 123 |
| **83 20 020** | 123 |
| **83 30 005** | 124 |
| **83 30 010** | 124 |
| **83 30 015** | 124 |
| **83 30 020** | 124 |
| **83 30 030** | 124 |
| **83 60 010** | 124 |
| **83 60 015** | 124 |
| **83 61 010** | 124 |
| **83 61 015** | 124 |
| **83 61 020** | 124 |
| **84 11 200** | 125 |
| **84 21 200** | 125 |
| **85 01 250 US** | 125 |
| **85 51 180 A** | 126 |
| **85 51 180 C** | 127 |
| **85 51 250 A** | 126 |
| **85 51 250 AF** | 127 |
| **85 51 250 C** | 127 |
| **85 59 250 A** | 126 |
| **85 59 250 A** | 127 |
| **85 59 250 C** | 127 |
| **86 01 250** | 129 |
| **86 02 250** | 129 |
| **86 03 125** | 129 |
| **86 03 150** | 129 |
| **86 03 180** | 129 |
| **86 03 250** | 129 |
| **86 03 300** | 129 |
| **86 03 400 US** | 130 |
| **86 05 150** | 129 |
| **86 05 180** | 129 |
| **86 05 180 T BKA** | 129, 210 |
| **86 05 250** | 129 |
| **86 05 250 T BKA** | 129, 210 |
| **86 06 250 US** | 129, 220 |
| **86 43 250 US** | 129 |
| **87 01 125** | 133 |
| **87 01 150** | 133 |
| **87 01 180** | 133 |
| **87 01 250** | 133 |
| **87 01 300** | 133 |
| **87 01 400 US** | 134 |
| **87 01 560 US** | 134 |
| **87 02 180** | 133 |
| **87 02 180 T BKA** | 133, 210 |
| **87 02 250** | 133 |
| **87 02 250 T BKA** | 133, 210 |
| **87 02 300** | 133 |
| **87 02 300 T BKA** | 133, 210 |
| **87 11 250** | 135 |
| **87 19 250** | 135 |

**87 21 250** 135
**87 21 300** 135
**87 22 250** 135
**87 26 250 T** 211
**87 28 250 US** 136, 221
**87 41 250** 137
**87 51 250** 137
**88 01 180** 139
**88 01 250** 139
**88 01 300** 139
**88 01 400** 140
**88 02 180** 139
**88 02 250** 139
**88 02 250 T BKA** 139, 210
**88 02 300** 139
**88 02 300 T BKA** 139, 210
**88 07 300** 139, 220
**88 08 250 US** 139, 220
**89 01 250** 142
**90 01 125** 142
**90 20 185** 142
**90 25 20** 143
**90 25 40** 144
**90 29 01** 143
**90 29 02** 143
**90 29 15** 143
**90 29 185** 142
**90 29 40** 144
**90 42 250** 144
**90 42 340** 144
**90 49 340** 144
**90 49 340 M** 144
**90 55 280** 145
**90 59 280** 145
**90 61 16** 145
**90 61 20** 145
**90 70 220** 146
**91 00 200** 146
**91 13 250** 147
**91 19 250 01** 147
**91 31 180** 147
**91 51 160** 148
**91 61 160** 148
**91 71 160** 148
**91 92 180** 148
**92 02 53** 149
**92 02 54** 149
**92 02 55** 149
**92 08 78 ESD** 150
**92 08 79 ESD** 150
**92 12 52** 149
**92 22 04** 151
**92 22 06** 151
**92 22 07** 151
**92 22 12** 151
**92 22 13** 151
**92 22 35** 152
**92 23 05** 151
**92 24 01** 151
**92 24 34** 152
**92 27 61** 152, 222
**92 27 62** 152, 222
**92 28 69 ESD** 150
**92 28 70 ESD** 150
**92 28 71 ESD** 150
**92 28 72 ESD** 150
**92 32 29** 151
**92 34 28** 151
**92 34 36** 152
**92 34 37** 152
**92 37 64** 152, 222
**92 38 75 ESD** 150
**92 44 42** 153
**92 52 23** 153
**92 58 74 ESD** 150
**92 64 43** 153
**92 64 44** 153
**92 67 63** 152, 222
**92 69 84** 154
**92 70 46** 153
**92 72 45** 153
**92 78 77 ESD** 150
**92 84 18** 154
**92 88 73 ESD** 150
**92 94 91** 154
**92 95 89** 154
**92 95 90** 154
**94 10 185** 143
**94 15 215** 155
**94 19 185** 143
**94 19 185 02** 143
**94 19 215** 155
**94 35 215** 155
**94 55 200** 156
**95 02 21** 156
**95 03 160 SB** 157
**95 05 10 SB** 158
**95 05 140** 157
**95 05 155 SBA** 158
**95 05 165** 158
**95 05 185** 157
**95 05 190** 157
**95 06 230** 158, 222
**95 11 165** 159
**95 11 200** 160
**95 12 165** 159
**95 12 165 T BKA** 159, 210
**95 12 200** 160
**95 12 500** 161
**95 17 500** 161, 224
**95 16 165 T** 211
**95 18 165 US** 159, 223
**95 18 200 SBA** 160, 223
**95 21 165** 159
**95 22 165** 159
**95 27 600** 161, 224
**95 29 600** 161, 224
**95 31 250 SBA** 162
**95 31 280 SBA** 162
**95 32 038** 163
**95 32 060** 164
**95 32 100** 164
**95 32 315 A** 165
**95 32 320** 166
**95 32 340 SR US** 167
**95 36 250 SBA** 162, 225
**95 36 280 SBA** 162, 225
**95 36 315 A** 165
**95 36 320** 166, 226
**95 39 250** 162
**95 39 280** 162
**95 39 315 A 01** 165
**95 39 315 A 02** 165
**95 39 320 01** 166, 226
**95 39 320 02** 166, 226
**95 39 720** 164
**95 39 870** 164
**95 41 165** 159
**95 59 200 01** 156
**95 61 150 US** 167
**95 61 190** 168
**95 62 160** 169
**95 62 190** 168
**95 62 190 T BKA** 168, 210
**95 71 445** 169
**95 71 600** 169
**95 77 600** 169, 227
**95 79 445** 169
**95 79 600** 169, 227
**95 81 600** 169
**95 89 600** 169
**97 21 215** 170
**97 21 215 B** 170
**97 21 215 C** 170
**97 21 215 SB** 170
**97 22 240** 170
**97 33 01** 173
**97 33 02** 173
**97 43 05** 174
**97 43 06** 174
**97 43 200** 174
**97 43 200 A** 174
**97 49 04** 175
**97 49 05** 175
**97 49 06** 175
**97 49 08** 175
**97 49 09** 175
**97 49 15** 175
**97 49 16** 175
**97 49 18** 175
**97 49 19** 175
**97 49 20** 175
**97 49 23** 175
**97 49 24** 175
**97 49 30** 175
**97 49 35** 175
**97 49 40** 175
**97 49 44** 175
**97 49 50** 176
**97 49 54** 176
**97 49 60** 176
**97 49 62** 176, 191
**97 49 63** 191
**97 49 64** 176
**97 49 65** 191
**97 49 65 1** 177, 191
**97 49 66** 191
**97 49 66 1** 177, 191
**97 49 67** 191
**97 49 68** 191
**97 49 68 1** 177, 191
**97 49 69 1** 176, 191
**97 49 69 2** 176, 191
**97 49 70** 176
**97 49 74** 176
**97 49 76** 176
**97 49 81** 176
**97 49 82** 176
**97 49 83** 176
**97 49 84** 176
**97 49 87** 176
**97 49 90** 176
**97 49 93** 176
**97 49 94** 176
**97 49 95** 176
**97 50 01** 177
**97 51 10** 178
**97 51 12** 178
**97 52 04** 181
**97 52 05** 181
**97 52 06** 181
**97 52 08** 181
**97 52 09** 181
**97 52 10** 181
**97 52 13** 181
**97 52 14** 181
**97 52 19** 181
**97 52 20** 181
**97 52 23** 181
**97 52 30** 182
**97 52 33** 182
**97 52 34** 182
**97 52 35** 182
**97 52 36** 182
**97 52 37** 182
**97 52 38** 182
**97 52 50** 182
**97 52 63 DG** 184
**97 52 64** 184
**97 52 65** 184
**97 52 65 DG** 184
**97 53 04** 185
**97 53 08** 187
**97 53 09** 187
**97 53 14** 185
**97 53 18** 186
**97 59 06** 178
**97 59 12** 178
**97 59 14** 181
**97 59 65 2** 177, 184
**97 61 145 A** 188
**97 61 145 F** 188
**97 62 145 A** 188
**97 68 145 A** 188, 227
**97 71 180** 188
**97 72 180** 188
**97 81 180** 189
**97 90 05** 190
**97 90 06** 190
**97 90 09** 190
**97 90 10** 190
**97 90 12** 190
**97 90 23** 190
**97 90 24** 190
**97 91 01** 191
**98 00 07** 228
**98 00 08** 228
**98 00 09** 228
**98 00 1/2"** 228
**98 00 1/4"** 228
**98 00 10** 228
**98 00 11** 228
**98 00 12** 228
**98 00 13** 228
**98 00 14** 228
**98 00 15** 228
**98 00 16** 228
**98 00 17** 228
**98 00 18** 228
**98 00 19** 228
**98 00 22** 228
**98 00 24** 228
**98 00 27** 228
**98 00 3/4"** 228
**98 00 3/8"** 228
**98 00 5/16"** 228
**98 00 5/8"** 228
**98 00 7/16"** 228
**98 00 9/16"** 228
**98 01 07** 230
**98 01 08** 230
**98 01 09** 230
**98 01 1 1/16"** 230
**98 01 10** 230
**98 01 11** 230
**98 01 11/16"** 230
**98 01 12** 230
**98 01 13** 230
**98 01 14** 230
**98 01 15** 230
**98 01 16** 230
**98 01 17** 230
**98 01 18** 230
**98 01 19** 230
**98 01 22** 230
**98 01 3/4"** 230
**98 01 5/16"** 230
**98 01 5/8"** 230
**98 01 7/8"** 230
**98 01 9/16"** 230

| | |
|---|---|
| **98 04 10** | 231 |
| **98 04 13** | 231 |
| **98 04 17** | 231 |
| **98 04 19** | 231 |
| **98 04 22** | 231 |
| **98 05 13** | 231 |
| **98 05 17** | 231 |
| **98 05 19** | 231 |
| **98 07 250** | 229 |
| **98 14 05** | 232 |
| **98 14 06** | 232 |
| **98 14 08** | 232 |
| **98 15 05** | 232 |
| **98 15 06** | 232 |
| **98 15 08** | 232 |
| **98 30** | 232 |
| **98 31** | 233 |
| **98 33 25** | 236 |
| **98 33 50** | 236 |
| **98 35 125** | 233 |
| **98 35 250** | 233 |
| **98 37 1/2"** | 235 |
| **98 37 10** | 234 |
| **98 37 11** | 234 |
| **98 37 12** | 234 |
| **98 37 13** | 234 |
| **98 37 14** | 234 |
| **98 37 16** | 234 |
| **98 37 17** | 234 |
| **98 37 19** | 234 |
| **98 37 3/4"** | 235 |
| **98 37 3/8"** | 235 |
| **98 37 5/16"** | 235 |
| **98 37 5/8"** | 235 |
| **98 37 7/16"** | 235 |
| **98 37 9/16"** | 235 |
| **98 39 05** | 236 |
| **98 39 06** | 236 |
| **98 39 08** | 236 |
| **98 40** | 232 |
| **98 41** | 233 |
| **98 42** | 236 |
| **98 43 50** | 236 |
| **98 45 125** | 233 |
| **98 45 250** | 233 |
| **98 47 1"** | 235 |
| **98 47 1/2"** | 235 |
| **98 47 10** | 234 |
| **98 47 11** | 234 |
| **98 47 11/16"** | 235 |
| **98 47 12** | 234 |
| **98 47 13** | 234 |
| **98 47 14** | 234 |
| **98 47 16** | 234 |
| **98 47 17** | 234 |
| **98 47 18** | 234 |
| **98 47 19** | 234 |
| **98 47 22** | 234 |
| **98 47 24** | 234 |
| **98 47 27** | 234 |
| **98 47 3/4"** | 235 |
| **98 47 5/8"** | 235 |
| **98 47 7/8"** | 235 |
| **98 47 9/16"** | 235 |
| **98 49 05** | 236 |
| **98 49 06** | 236 |
| **98 49 08** | 236 |
| **98 52** | 237 |
| **98 53 03** | 237 |
| **98 53 13** | 237 |
| **98 54** | 237 |
| **98 55** | 237 |
| **98 56** | 238 |
| **98 56 09** | 238 |
| **98 62 01** | 238 |
| **98 62 02** | 238 |
| **98 64 02** | 239 |
| **98 65 01** | 239 |
| **98 65 02** | 239 |
| **98 65 03** | 239 |
| **98 65 10** | 239 |
| **98 65 20** | 239 |
| **98 65 30** | 239 |
| **98 67 05** | 240 |
| **98 67 10** | 240 |
| **98 90** | 240 |
| **98 99 11** | 241 |
| **98 99 11 S3** | 243 |
| **98 99 11 S4** | 243 |
| **98 99 11 S5** | 243 |
| **98 99 11 S6** | 243 |
| **98 99 12** | 244 |
| **98 99 13** | 245 |
| **98 99 13 S4** | 245 |
| **98 99 13 S5** | 245 |
| **98 99 14** | 247 |
| **98 99 14 LE** | 247 |
| **99 00 200** | 86 |
| **99 00 220** | 86 |
| **99 00 220 K12** | 86 |
| **99 00 250** | 86 |
| **99 00 280** | 86 |
| **99 00 300** | 86 |
| **99 01 200** | 86 |
| **99 01 220** | 86 |
| **99 01 250** | 86 |
| **99 01 280** | 86 |
| **99 01 300** | 86 |
| **99 10 250** | 87 |
| **99 10 300** | 87 |
| **99 11 250** | 87 |
| **99 11 300** | 87 |
| **99 14 250** | 87 |
| **99 14 300** | 87 |
| **9K 98 98 20 US** | 248 |
| **9K 98 98 21 US** | 248 |
| **9K 98 98 22 US** | 248 |
| **9K 98 98 25 US** | 248 |
| **9K 98 98 26 US** | 248 |
| **9K 98 98 27 US** | 249 |
| **9K 98 98 30 US** | 249 |
| **9K 98 98 31 US** | 249 |

ACSR Cable Cutter with ratchet action for cables with a steel core ..... 167
Adjustable Wrench ..... 229
Alligator® – Water Pump Pliers ..... 138, 220
Alligator® XL – Water Pump Pliers ..... 140
Anvil Shears for cutting soft material such as rubber and leather ..... 156
Automatic Flat Cable Stripping Pliers ..... 40
Automatic Insulation Stripper ..... 39, 40
Automatic Stripping Pliers ..... 41
Belt pouch ..... 198
Bolt Cutters ..... 91
Bolt End Cutting Nippers – high lever transmission ..... 86
Bowden Cable Cutter ..... 167
Box Wrenches ..... 230
Break-off Pliers for vehicle bodywork ..... 83
Cable Cutters (ratchet action) for steel wire armored cable (SWA-Cable) ..... 165
Cable Cutters for Wire Rope and ACSR ..... 169, 227
Cable Cutters with ratchet action ..... 162, 225
Cable Cutters with ratchet action and telescopic handles ..... 164
Cable Cutters with ratchet principle, 3-stage ..... 166, 226
Cable Knife with replaceable blade ..... 238
Cable Knives ..... 237
Cable Shears ..... 158, 159, 161, 222, 223, 224
Cable Shears with ratchet action and telescopic handles ..... 163
Cable Shears with twin cutting edge ..... 160, 223
Carpenters' Pincers ..... 82, 83
Circlip Pliers for external circlips on shafts ..... 75
Circlip Pliers for grip rings on shafts ..... 80
Circlip Pliers for internal circlips in bore holes ..... 74
Circlip Pliers for large external circlips ..... 73
Circlip Pliers for large internal circlips ..... 73
Circlip Pliers Sets ..... 197, 200
Circlip Tool for internal and external circlips ..... 81
CoBolt® – Compact Bolt Cutters ..... 88
CoBolt® "Fencing" ..... 90
CoBolt® XL – Compact Bolt Cutters ..... 90
Cobra® – High-Tech Water Pump Pliers ..... 132, 221
Cobra® ES – High-Tech Water Pump Pliers, extra-slim ..... 137
Cobra® Insulated ..... 136
Cobra® QuickSet ..... 135
Cobra® XL/XXL – High-Tech Water Pump Pliers ..... 134
Cobra®...matic – High-Tech Water Pump Pliers ..... 135
Combination Pliers ..... 28, 214
Combination Shears ..... 157
Compact Bolt Cutters ..... 88, 90
Compact Diagonal Cutter ..... 219
Compact Diagonal Cutters, high lever transmission ..... 98
Compact Tool Case ..... 241
Concrete Mesh Cutter ..... 92
Concreters' Nippers ..... 84
Control Cabinet Keys for all standard cabinets and shut-off systems ..... 193
Crimp Assortments for ferrules (end sleeves) ..... 190
Crimp System Pliers for exchangeable crimping dies ..... 174
Crimping Dies for Crimp System Pliers ..... 175, 176
Crimping Pliers ..... 170
Crimping Pliers for two-handed operation ..... 180
Crimping Pliers for Western plugs ..... 178
Crimping Pliers for wire ferrules (end sleeves) ..... 188, 227
Crimping Pliers with front loading mechanism for wire ferrules (end sleeves) ... 189
Crimping Pliers with quick changer magazine ..... 172
Crimping Pliers with short design ..... 181
Crimping Pliers with side cutter for Scotchlok™ connectors ..... 177
Crossover Tweezers ..... 154
Cutter for ribbon cable ..... 155
Cycle Pliers ..... 125
Diagonal Cutter for fiber optics ..... 95
Diagonal Cutters ..... 93, 94, 218
Diagonal Cutters for electromechanics ..... 102
Dismantling Knives ..... 237
Dismantling Pliers ..... 43
Dismantling tool for data cables ..... 49
Dismantling Tools ..... 47, 48
Duckbill Pliers ..... 61
Ear Clamp Pliers ..... 32
Electricians' Pliers ..... 42
Electricians' Shears ..... 158
Electronic Super Knips® ..... 114, 116
Electronic Super Knips® XL ..... 117
Electronics Diagonal Cutters ..... 107, 108, 112
Electronics Diagonal Cutters ESD ..... 110, 113
Electronics End Cutting Nippers ..... 104
Electronics End Cutting Nippers ESD ..... 106
Electronics Mounting Pliers ..... 67
Electronics Oblique Cutting Nippers ..... 103
Electronics Pliers ..... 65
Electronics Pliers ESD ..... 66
Electronics Pliers Sets for working on electronic components ..... 203
Electronics Wire Stripper ..... 34
Electronics Wire Stripping Shears ..... 34
End Cutting Nippers ..... 87
End Cutting Nippers for mechanics ..... 87
ErgoStrip® – Universal Dismantling Tool ..... 50
Extension Bars ..... 233
Family Sets ..... 196
Farriers' Pincers ..... 83
Flat Nose Grozing Pliers ..... 148
Flat Nose Pliers ..... 51, 216
Flat Nose Pliers of plastic ..... 238
Flat Nose Pliers with cutting edges ..... 52
Flush Cutting Diagonal Pliers for Plastics ..... 95
Four-Mandrel Crimping Pliers for turned contacts ..... 183
Glass Breaking Pincer ..... 147
Glass Nibbling Pincers ..... 148
Grip Pliers ..... 71
Gripping Pliers ..... 60
Gripping Pliers for precision mechanics ..... 68
Halogen Bulb Exchange Pliers ..... 60
Hexagon Sockets ..... 234, 236
High Leverage Center Cutters ..... 102
High Leverage Combination Pliers ..... 27, 214
High Leverage Concreters' Nippers ..... 85
High Leverage Diagonal Cutters ..... 99, 100, 219
High Leverage End Cutting Nippers ..... 86
High Leverage Flush Cutter for soft metal and plastic ..... 96
High-Tech Water Pump Pliers ..... 132, 135, 137
High-Tech Water Pump Pliers, Insulated ..... 136, 221
Hog Ring Pliers ..... 148
Hose Clamp Pliers for Click Clamps ..... 127
Installation Pliers ..... 45, 216
Insulated Tools Sets ..... 248
Insulating Mats ..... 240
Insulating Plastic Clamp ..... 239
Insulation Stripper with replaceable blades ..... 35

Insulation Strippers ... 33, 46, 215
Insulation Strippers with Cable Shears ... 44
Lineman's Pliers ... 30, 215
Locators for crimping pliers and profiles ... 177
Long Nose Pliers ... 59, 218
Long Reach Needle Nose Pliers ... 56
Long Reach Needle Nose Pliers with transverse wave ... 57
Magnetic LED Lamp ... 195
Mechanics' Pliers ... 69
Mini Pliers Sets in belt tool pouch ... 204
Mini Water Pump Pliers ... 142
Mini Wire Stripper ... 41
Mitre Shears for plastic and rubber sections ... 155
MultiCrimp® – Crimping Pliers ... 172
MultiStrip 10 – Automatic Insulation Stripper ... 39
Needle-Nose Combination Pliers ... 29, 215
Notching Pliers ... 145
Nut Drivers with T-Handle ... 231
Open End Wrenches ... 228
Parrot beak pincer ... 146
Pipe and Connector Pliers ... 122
Pipe Cutter for composite and plastic pipes ... 144
Pipe Cutter for composite pipes and protective tubes ... 143
Pipe Cutter for flexible pipes and flexible hoses ... 142
Pipe Cutter for plastic conduit pipes (electrical installation work) ... 143
Pipe Wrenches 45° ... 123
Pipe Wrenches 90° ... 123
Pipe Wrenches S-Type ... 124
Pipe Wrenches S-Type with rapid adjustment ... 124
Plastic Slip-On Caps ... 239
Pliers and a wrench in a single tool ... 130
Pliers Sets ... 204
Pliers Sets in a foam tray ... 199
Pliers Sets in plastic deep-drawn packaging ... 201
Pliers Wrench XL ... 130
Pliers Wrenches ... 128, 220
PreciForce® – Crimping Pliers ... 182
Precision Circlip Pliers for internal circlips in bore holes ... 76
Precision Circlip Pliers Sets ... 200
Precision Circlip Pliers to assemble external circlips on shafts ... 78
Precision Electronics Diagonal Cutters ... 118
Precision Electronics Diagonal Cutters ESD ... 120
Precision Electronics Gripping Pliers ... 64
Precision Insulation Strippers with replaceable blades ... 36
Precision Mechanics Pliers ... 52
Precision Tweezers ... 149, 151, 152, 153, 154, 222
Precision Tweezers ESD ... 150
Profi-Key for all standard shut-off systems ... 193
PUK® Junior Hacksaw ... 240
Punch Lock Riveters ... 144
Raptor™ Pliers ... 136
Relay Adjusting Pliers ... 61
Reversible Ratchet ... 233, 236
Revolving Punch Pliers ... 146
Round Nose Pliers ... 52, 216
Round pliers with cutting edge ... 51
Safety Compact Tool Case ... 242
Safety Tool Rolls ... 245
Screwdrivers ... 232
Self-adjusting crimping pliers for end sleeves (ferrules) with rotating crimp head ... 186
Self-adjusting Crimping Pliers with front loading mechanism for ferrules (end sleeves) ... 187
Self-Adjusting Crimping Pliers with side-loading mechanism for ferrules (end sleeves) ... 185
Self-Adjusting Insulation Strippers ... 38
Self-Clamping Slip-On Caps ... 239
Shears for KEVLAR® fibers ... 157
Sheet Metal Nibbler ... 145
SmartGrip® – Water Pump Pliers with automatic adjustment ... 125
Snipe Nose Pliers of plastic ... 238
Snipe Nose Pliers with Center Cutter ... 56
Snipe Nose Side Cutting Pliers ... 53, 54, 55, 217
Sockets ... 235
Special Retaining Ring Pliers for retaining rings on shafts ... 80
Spring Hose Clamp Pliers ... 126
Spring Hose Clamp Pliers with locking device ... 127
Standard Tool Case ... 244
Stork Beak Pliers ... 55, 217
Stripping Tool for coaxial cables ... 48
StriX – Insulation Strippers with Cable Shears ... 44
Telephone Pliers ... 56, 58
T-handle ... 232
Tile Breaking Pliers ... 147
Tile Nibbling Pincer ... 146
Tool Case "BIG Twin Move" ... 205
Tool Case for photovoltaics ... 191
The Tool Drop Protection System ... 208
Tool Kits ... 202
Tool Pouch ... 198
Tool Roll ... 196, 245
Torque Wrench with driving square, reversible ... 236
TwinForce® – High Performance Diagonal Cutters ... 99
TwinKey® for all standard cabinets and shut-off systems ... 192
Twistor16® – Self-Adjusting Crimping Pliers ... 186
Universal Dismantling Tools ... 49
Universal Grip Pliers ... 70
Universal Key "Construction" ... 194
Universal Key for all standard cabinets and shut-off systems ... 194
Universal Tool Case ... 246
Vinyl Shears for cable ducts ... 156
Water Pump Pliers ... 138, 142, 220
Water Pump Pliers with automatic adjustment ... 125
Welding Grip Pliers ... 72
Wire Rope Cutter ... 169
Wire Rope Shears ... 168
Wire Stripping Tweezers – Coated ... 46
X-Cut® – Compact Diagonal Cutter ... 98, 219

## BASIC SHAPES OF THE JAWS

**flat jaws**

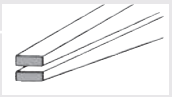

**half-round jaws**



**round jaws**

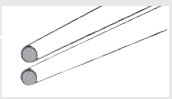



**Cutting Pliers**
for cutting or nipping (diagonal, centre and end cutters, carpenters' pincers, etc.)



**Gripping Pliers**
(flat-, long-nose and water pump pliers, etc.)

## JOINT CONNECTIONS

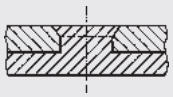

**Forged-in joint axle**
The rivet is part of one handle (forged from one piece)
> high stability for highest strain
> long service life

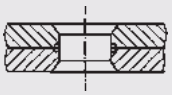

**Joint with inserted rivet**
A proven, sturdy and precise rivet connection for all standard pliers.

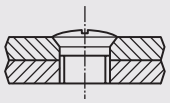

**Bolted joint**
For particularly demanding requirements in terms of precision and smooth operation, e.g. in circlip pliers and cable shears (even the finest multi-stranded conductors have to be cut cleanly).



**Combined Pliers**
for cutting and gripping (combination, stork beak and radio pliers, etc.)



**Special Pliers**
for special applications, e.g. notching or punching different types of materials (sheet-metal nibbler, tile nibbling pincers, etc.)

## TYPES OF JOINTS

**Lap joint**
The two pliers halves lie on top of each other but are not milled out.

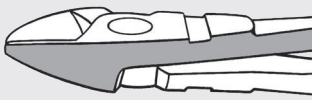

**Single joint**
Half the thickness in each pliers handle is milled away in the joint area so that both handles can be laid into each other.

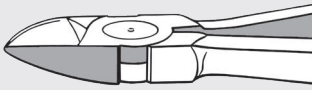

**Box joint**
One handle on the pliers is slit. The other handle is pushed through this slot. This joint connection can withstand a high level of load and strain because the joint bolt is supported on both sides and the inside handle is guided on both sides.

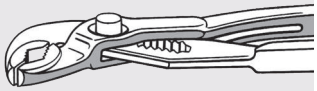

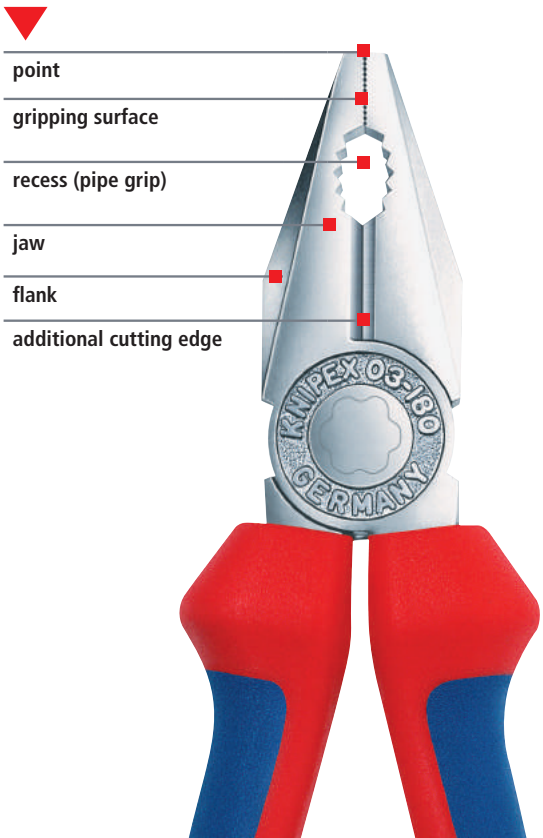

## Safety instructions

- Each tool should only be used for its specified purpose.
- When using cutting pliers: beware of wire ends flying off. Wear protective goggles and – if needed – gloves. Be aware of bystanders!
- Only handles marked with the symbol ⩓1000 V are insulating.

## Care Tips

A drop of oil on polished surfaces and in the joint will keep the tool in good working order and will increase the service life of your pliers.

The maximum values always indicate the performance limit under the most favorable cutting conditions, when the wire is placed as near as possible to the joint.



## Direction and position of cutting edges

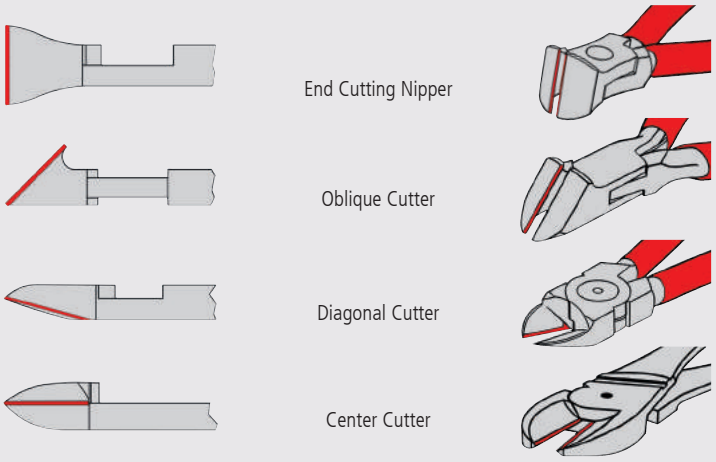


## Cutting edge shapes

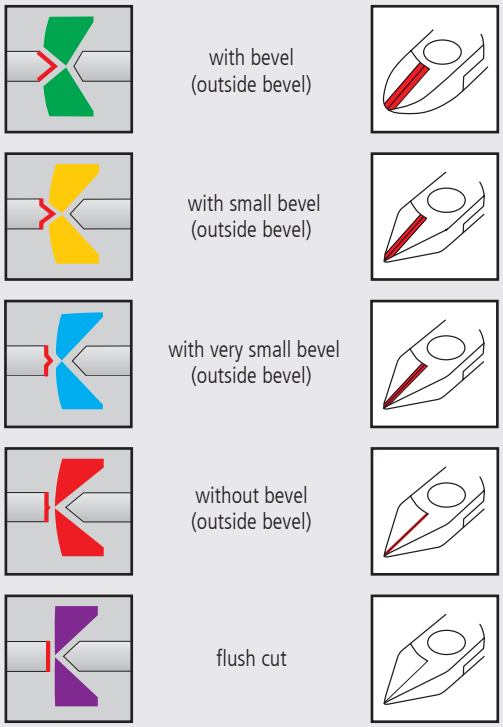


## WIRE CLASSES

| | Material examples | Type of wire | Tensile strength N/mm² | Tensile strength kp/mm² |
|---|---|---|---|---|
| ◔ | Copper, plastics | soft | 220 | 22 |
| ◑ | Nail, wire pin | medium-hard | 750 | 75 |
| ◕ | Wire rope strand, steel wire | hard | 1800 | 180 |
| ● | Spring steel wire | piano wire | 2300 | 230 |

## STRUCTURE OF THE ARTICLE NUMBER

| Basic model<br>e.g.:<br>Combination Pliers | Style<br>e.g.:<br>straight | Finish<br>e.g.:<br>head polished, handles plastic coated | Length<br>e.g.:<br>180 mm |
|---|---|---|---|
| **03** | 0 | 1 | 180 |

## HEAD / HANDLES

| | | |
|---|---|---|
| **0** | Pliers black atramentized, head polished |  |
| **1** | Head polished, handles plastic coated |  |
| **2** | Head polished, handles with multi-component grips |  |
| **3** | Pliers chrome plated, handles plastic coated |  |
| **4** | Pliers chrome plated |  |
| **5** | Pliers chrome plated, handles with multi-component grips |  |
| **6** | Pliers chrome plated, handles insulated with multi-component grips VDE-tested<br>DIN EN/IEC 60900 | 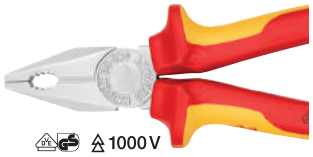 |
| **7** | Pliers chrome plated, handles with dipped insulation, VDE tested<br>DIN EN/IEC 60900 | 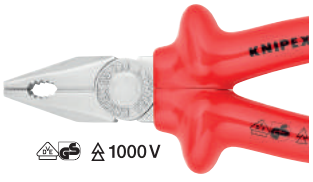 |
| **8** | Pliers head polished, handles with multi-component grips; ASTM-tested |  |

# SYMBOLS

| | |
|---|---|
| | flat jaws |
| | half-round jaws |
| | round jaws |
| | flat and pointed jaws |
| | box joint |
| | bolted joint |
| | smooth gripping surfaces |
| | serrated gripping surfaces |
| | cross-hatched, knurled gripping surfaces |
| | with opening spring |

| | |
|---|---|
| | with lead catcher |
| | angle |

| | |
|---|---|
| | centre cutter |
| | cutting edges with bevel |
| | cutting edges with small bevel |
| | cutting edges with very small bevel |
| | cutting edges without bevel |
| | for flush cut of soft materials |

| | |
|---|---|
| | electrostatic discharging, dissipative |
| | electronics |
| | VDE tested, also in conformance to GPSG (Equipment and Product Safety Act) |
| 1000 V | insulated according to IEC 60900 and ASTM F1505, usable up to 1000 V AC/1500 V DC |
| 1000 V | insulated according to DIN VDE 0680/1, suitable for the application up to 1000 V AC / 1500 V DC |
| CE | conforms to a European directive |
| | mechanically tested in accordance with the equipment and product safety act |
| | WEEE marking (Waste Electrical and Electronic Equipment Directive) |

| | |
|---|---|
| | weight |
| | length |

| | |
|---|---|
| | soft wire |
| | medium hard wire |
| | hard wire |
| | piano wire |
| | Cu + Al multi-conductor cable, solid and multi-stranded |
| | wire rope |
| Fe | iron |
| | ribbon cable |
| | steel wire armoured cable (SWA) |

### Registered Trademarks of the companies

| | |
|---|---|
| Con-Pearl® | PARAT-WERK Schönenbach GmbH + Co. KG |
| gesis® | Wieland Electric GmbH |
| Kapton®, KEVLAR® | E. I. du Pont de Nemours and Company |
| Radox® | HUBER+SUHNER AG |
| Phillips® | Phillips Screw Company |
| Pozidriv® | European Industrial Service Ltd. |
| systainer® | TANOS GmbH |
| Mini-Fit®, Micro-Fit™ | Molex® Inc. |
| MC® | Multi-Contact AG |
| Solarlok® | Tyco Electronics |
| Torx® | Acument Global Technologies, Inc. |

**KNIPEX-Werk**
**C. Gustav Putsch KG**
Wuppertal, Germany

**KNIPEX Tools**
1500 Busch Parkway
Buffalo Grove, IL 60089

Tel
Fax

© 2019
9K C318 00042